TECHNICAL MANUAL

MEDALIST-12 CHANNEL

DUAL CHANNEL STEREO CONSOLE

994 8835 001

T.M. No. 888-6004-009

Printed: December 17, 1988

MANUAL REVISION HISTORY
888-6004-xxx

MEDALIST-12 Channel
Dual Channel Stereo Console
994 8835 001

REV.#	DATE	ECN	PAGES AFFECTED
005	03/03/86	29550	Replace the following pages: Title Page vii, viii, ix, 3-1, 3-2, 3-4, 3-8, 3-9, 3-10 3-19, 4-1, 4-2, 4-21/4-22, 4-39/4-40 Add the following page: Manual Revision History Page
006	03/08/86	29592	Replace the following pages: Title Page 1-16, 1-18, 1-19, 1-20 Manual Revision History Page
007	03/11/86	29762	Replace the following pages: Title Page 3-23, 3-24, 4-29/4-30 Manual Revision History Page
008	08/11/87	34547	Replaced the following pages: Title Page, MRH-1/MRH-2, 3-23 & 4-29/4-30
009	12/17/88	61043	Replaced the following pages: Title Page, MRH-1/MRH-2, & 4-29/4-30

WARNING

POTENTIAL EAR DAMAGE

Sudden and extreme audio level shifts can occur in any electronic equipment from input stage to the output stage.

Protect the EARS of users. Exercise good judgement in selecting amplifier power levels to be used with speakers and earphones. For example, using headphones with a high powered amplifier is inappropriate.

Modern audio designs can provide 20 to 30dB of excess power (headroom) above normal operating level. A component failure could therefore cause a power level change of between 100 and 1,000 times.

SUCH A LARGE CHANGE COULD CAUSE SERIOUS AND PERMANENT EAR DAMAGE.

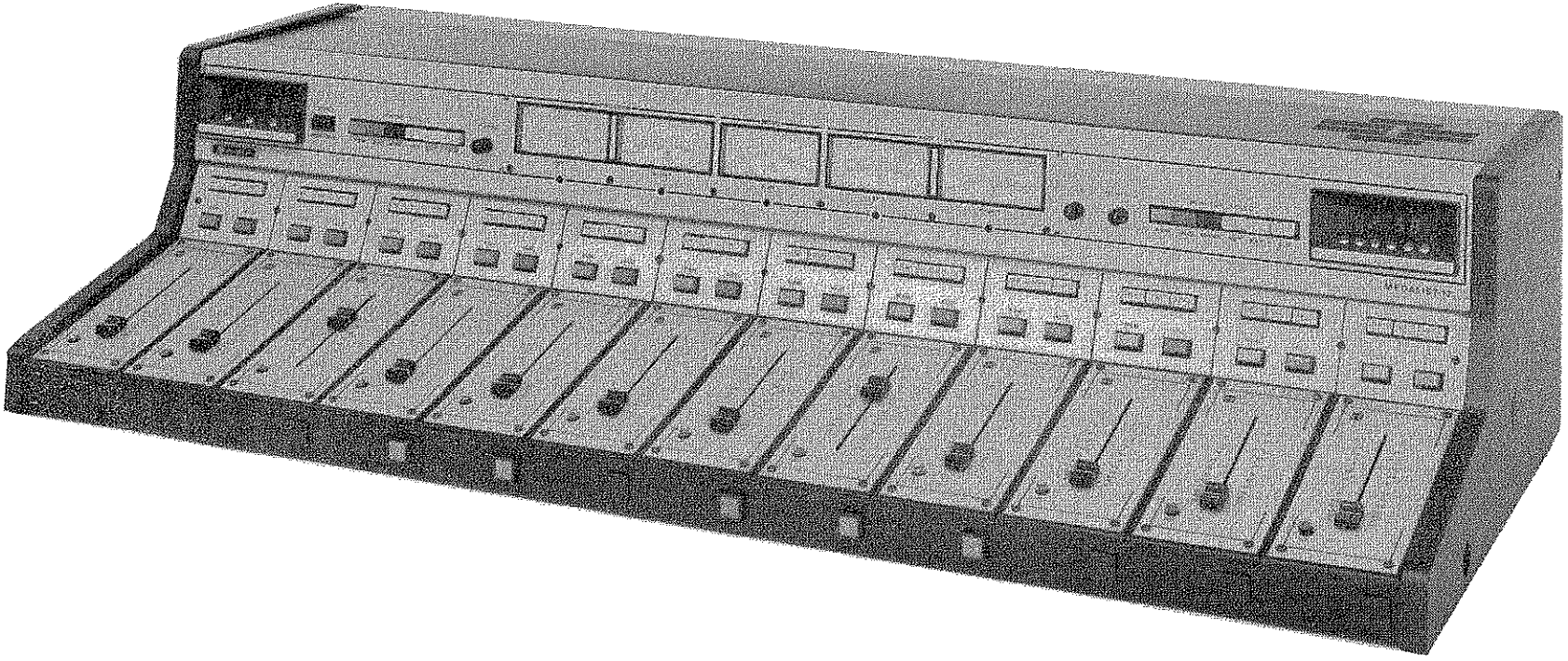

MEDALIST-12 CONSOLE, 12 CHANNEL DUAL STEREO AUDIO CONSOLE

888-6004-003

The Medalist-12 is a desk top, 12 channel, dual stereo audio console. Designed primarily for radio on-air use, inherent versatility permits fulfillment of other needs as well. Below is a list of the standard items included:

1. Thirty six stereo inputs
2. Two microphone preamps
3. Two balanced stereo line outputs, program and audition, plus mono/sum
4. Line level stereo monitor feed
5. Headphone feed with 2W/CH driver
6. VU metering, for program, audition and mono/sum
7. Cue bus with internal speaker
8. Three location speaker muting

With available options, the Medalist-12 can be tailored to individual requirements. Both linear and rotary fader versions are available and may be intermixed if desired.

The cabinet is constructed of precision fabricated aluminum and wood. A high quality silkscreened exterior finish provides excellent wear characteristics and easy cleaning. For maximum durability, attenuator panels are covered with acrylic overlays. Power is supplied from a 5 1/4" rack mounted transformer package and will operate from either 120/240 VAC 50/60 Hz.

DESCRIPTION

A three section source select switch is provided on each channel, allowing up to 36 line level inputs. Position 1 of any channel is easily converted to microphone level with the simple addition of a preamp with a plug-in cable to the selector board. The remaining 2 inputs are unaffected and permit line level sources to be used. Up to 10 additional microphone preamps may be added at any time for a total of 12. Relay speaker muting and warning light operation for three locations are user selectable.

Input channels may be assigned to either or both output buses which drive electronically balanced amplifiers, providing maximum output levels exceeding +26dBm. Inputs may also be assigned to cue. Upon activation of an attenuator plate mounted switch, a pre-fader signal is summed and sent to the internal speaker. When cue is selected, other assignments on that channel are inhibited, preventing unwanted signals from appearing on a main bus. Cue may be initialized regardless of fader position. Five buffered VU meters monitor output levels and are referenced to 0VU = +8dBm.

Two independent monitor feeds are included; with each feed having a six position source selector and level control. One is for headphone monitoring and includes a chassis mounted jack and a 2W/ch driver. Sources available are Program, Audition, Mono, Network, External 1, and Cue. The other feed supplies a signal for driving an optional external power amplifier and speakers. Sources available are the same as for headphone except the last

position (Cue) has been replaced with External 2. Network (Mono), External 1 (Stereo), External 2 (Stereo) are inputs that appear in the monitor circuits only..

Specific tailoring to individual needs may be accomplished through addition of options, a careful selection will greatly enhance versatility.

Up to ten additional microphone inputs may be added. Installation is simple and requires only the mounting of a single circuit board and connection of a plug-in cable. A mono feed is an internally generated mono signal and is switch selectable between program and audition and includes facilities for remote program cue.

The third output amplifier, being stereo, has a remaining unused channel. Its output may be used to feed program or audition down phone lines to remotes. This signal is available to source 2 and 3 of channels 11 and 12. Installation of remote start switches is also possible.

Through careful design and component selection the Medalist-12 offers uncompromising performance at a reasonable price. High RFI immunity, burned-in integrated circuits, and excellent field support are all in the Harris tradition to assure reliable and trouble free operation.

Electrical Characteristics

FUNCTION	CHARACTERISTIC
OUTPUT CHANNELS:	Stereo PROGRAM and Audition, plus mono SUM channel, with +8 VU output level and VU meters.
INPUT CHANNELS:	12 total. Stereo line level, or some with mono mic level with pan-pot for left/right balance.
INPUT CIRCUITS:	36 total, with 3-position source selector switch in each of the 12 input channels. First position of each group capable of mic input, up to 12 mics total. Second and third positions on input channels 11 and 12 capable of remote line operation with program cue fed down the line before being switched into the console. All others for any line source, such as cart machines, turntables, reel-reel, etc.
STANDARD AMPLIFIER COMPLEMENT:	2 microphone preamps, 3 stereo program line amplifiers, stereo headphone amplifier, stereo monitor driver (to optional external speaker power amplifier), and mono/sum cue amplifier with inbuilt speaker.
OUTPUT CIRCUITS:	2 stereo plus mono/sum program line level outputs, stereo monitor driver @ 1 volt maximum output (external power amplifier required), stereo headphone feed for external power amplifier (if more than 2 watts per channel internal headphone amplifier is desired.
INPUT IMPEDANCES.	
MICROPHONE:	5K ohms, minimum, active balanced
CART MACHINES, ETC.:	8K ohms, minimum, active balanced
EXT 1, EXT 2:	8K ohms, minimum, active balanced
NETWORK:	620 ohms terminated, active balanced

Electrical Characteristics (continued)

FUNCTION	CHARACTERISTIC
SOURCE IMPEDANCES.	
MICROPHONE:	150/250 ohms
CART MACHINES:	150/600 ohms
EXT 1, EXT 2:	150/600 ohms
NETWORK:	600 ohms
OUTPUT IMPEDANCES	
PGM, AUD, MONO:	20 ohms, resistive
MONITOR FEED;	50 ohms maximum, resistive
PROGRAM CUE TO REMOTE LINES:	Approx. 2K ohms, resistive
EXTERNAL PHONE FEED:	50 ohms maximum, resistive
LOAD IMPEDANCES	
PGM, AUD, MONO:	150/600 ohms
MONITOR FEED;	1K ohms or greater
PROGRAM CUE TO REMOTE LINES:	600 ohms or greater
EXTERNAL PHONE FEED:	1K ohms or greater
GAIN	
MIC TO LINE:	94 dB +/-2 dB with controls @ minimum attenuation
TAPE TO LINE:	30 dB +/-2 dB with controls @ minimum attenuation
FREQUENCY RESPONSE	
MIC TO LINE:	+0, -0.5 dB, 20Hz to 20kHz
TAPE TO LINE:	+0, -0.25 dB, 20 Hz to 20 kHz
BANDPASS:	-3 dB @ 3 Hz and 100 kHz
TOTAL HARMONIC & IM DISTORTION	
PGM, AUD, MONO:	0.05% maximum, 20 Hz to 20 kHz @ +8 dBm output 0.1% maximum, 20 Hz to 20 kHz @ +18 dBm output Clipping level: +26 dBm/600 ohms, or higher
SIGNAL TO NOISE	
MIC TO LINE:	77 dB (or better) below +18 dBm output with -50 dBv input level, for typical proof measurements; -127 dBv (or better) equivalent input noise with 20 Hz to 20 kHz bandpass and normal control settings.
TAPE TO LINE:	95 dB (or better) below +18 dBm output with nominal +14 dBv input level and normal control settings.
MONITOR 7 PHONE FEED:	Approx. same as TAPE TO LINE.

Electrical Characteristics (continued)

FUNCTION	CHARACTERISTIC
CUE AMPLIFIER OUTPUT:	6 watts with complex wave into 8 ohm speaker
HEADPHONE AMPLIFIER:	2 watts per channel with complex wave into 8 ohm phones, 7 volts RMS into phones of 600 ohms or greater
POWER REQUIREMENTS:	100-125/200-250 volts, 50/60 Hz 100 watts maximum
SIZE	
MAINFRAME:	513 mm (20 in) deep 278 mm (11 in.) high 1241 mm (49 in.) wide
POWER TRANSFORMER/FUSE ASS'Y (with 25 ft. interconnecting cable. Plugs on both ends.)	152 mm (6 in.) deep 133 mm (5.25 in.) high
WEIGHT:	36 kg (80 lbs)

WARNING

THE CURRENTS AND VOLTAGES IN THIS EQUIPMENT ARE DANGEROUS. PERSONNEL MUST AT ALL TIMES OBSERVE SAFETY REGULATIONS.

This manual is intended as a general guide for trained and qualified personnel who are aware of the dangers inherent in handling potentially hazardous electrical/electronic circuits. It is not intended to contain a complete statement of all safety precautions which should be observed by personnel in using this or other electronic equipment.

The installation, operation, maintenance and service of this equipment involves risks both to personnel and equipment, and must be performed only by qualified personnel exercising due care. HARRIS CORPORATION shall not be responsible for injury or damage resulting from improper procedures or from the use of improperly trained or inexperienced personnel performing such tasks.

During installation and operation of this equipment, local building codes and fire protection standards must be observed. The following National Fire Protection Association (NFPA) standards are recommended as references:

- Automatic Fire Detectors, No. 72E
- Installation, Maintenance, and Use of Portable Fire Extinguishers, No. 10
- Halogenated Fire Extinguishing Agent Systems, No. 12A

WARNING

ALWAYS DISCONNECT POWER BEFORE OPENING COVERS, DOORS, ENCLOSURES, GATES, PANELS OR SHIELDS. ALWAYS USE GROUNDING STICKS AND SHORT OUT HIGH VOLTAGE POINTS BEFORE SERVICING. NEVER MAKE INTERNAL ADJUSTMENTS, PERFORM MAINTENANCE OR SERVICE WHEN ALONE OR WHEN FATIGUED.

Do not remove, short-circuit or tamper with interlock switches on access covers, doors, enclosures, gates, panels or shields. Keep away from live circuits, know your equipment and don't take chances.

WARNING

IN CASE OF EMERGENCY ENSURE THAT POWER HAS BEEN DISCONNECTED.

WARNING

IF OIL FILLED OR ELECTROLYTIC CAPACITORS ARE UTILIZED IN YOUR EQUIPMENT, AND IF A LEAK OR BULGE IS APPARENT ON THE CAPACITOR CASE WHEN THE UNIT IS OPENED FOR SERVICE OR MAINTENANCE, ALLOW THE UNIT TO COOL DOWN BEFORE ATTEMPTING TO REMOVE THE DEFECTIVE CAPACITOR. DO NOT ATTEMPT TO SERVICE A DEFECTIVE CAPACITOR WHILE IT IS HOT DUE TO THE POSSIBILITY OF A CASE RUPTURE AND SUBSEQUENT INJURY.

TREATMENT OF ELECTRICAL SHOCK

1. IF VICTIM IS NOT RESPONSIVE FOLLOW THE A-B-CS OF BASIC LIFE SUPPORT.

PLACE VICTIM FLAT ON HIS BACK ON A HARD SURFACE

(A) AIRWAY

IF UNCONSCIOUS.
OPEN AIRWAY

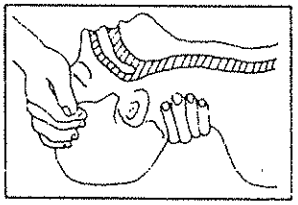

LIFT UP NECK
PUSH FOREHEAD BACK
CLEAR OUT MOUTH IF NECESSARY
OBSERVE FOR BREATHING

(B) BREATHING

IF NOT BREATHING.
BEGIN ARTIFICIAL BREATHING

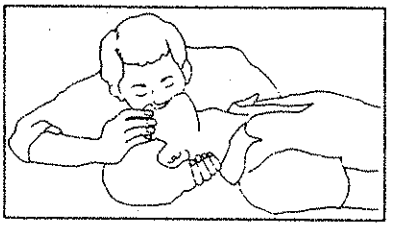

TILT HEAD
PINCH NOSTRILS
MAKE AIRTIGHT SEAL

4 QUICK FULL BREATHS

REMEMBER MOUTH TO MOUTH RESUSCITATION MUST BE COMMENCED AS SOON AS POSSIBLE

CHECK
CAROTID PULSE

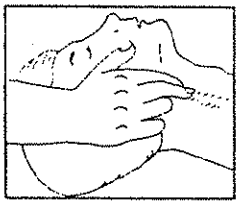

IF PULSE ABSENT,
BEGIN ARTIFICIAL
CIRCULATION

(C) CIRCULATION

DEPRESS STERNUM 1 1/2 TO 2 INCHES

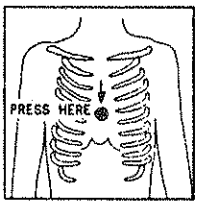

APPROX. RATE OF COMPRESSIONS --80 PER MINUTE
- ONE RESCUER
- 15 COMPRESSIONS
- 2 QUICK BREATHS

APPROX. RATE OF COMPRESSIONS --60 PER MINUTE
- TWO RESCUERS
- 5 COMPRESSIONS
- 1 BREATH

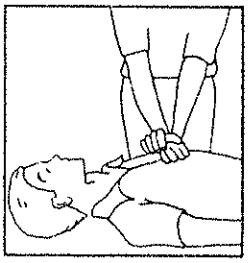

NOTE: DO NOT INTERRUPT RHYTHM OF COMPRESSIONS WHEN SECOND PERSON IS GIVING BREATH

CALL FOR MEDICAL ASSISTANCE AS SOON AS POSSIBLE.

2. IF VICTIM IS RESPONSIVE.

A. KEEP THEM WARM
B. KEEP THEM AS QUIET AS POSSIBLE
C. LOOSEN THEIR CLOTHING
D. A RECLINING POSITION IS RECOMMENDED

FIRST-AID

Personnel engaged in the installation, operation, maintenance or servicing of this equipment are urged to become familiar with first-aid theory and practices. The following information is not intended to be complete first-aid procedures, it is brief and is only to be used as a reference. It is the duty of all personnel using the equipment to be prepared to give adequate Emergency First Aid and thereby prevent avoidable loss of life.

Treatment of Electrical Burns

1. Extensive burned and broken skin

   a. Cover area with clean sheet or cloth. (Cleanest available cloth article.)
   b. Do not break blisters, remove tissue, remove adhered particles of clothing, or apply any salve or ointment.
   c. Treat victim for shock as required.
   d. Arrange transportation to a hospital as quickly as possible.
   e. If arms or legs are affected keep them elevated.

   NOTE

   If medical help will not be available within an hour and the victim is conscious and not vomiting, give him a weak solution of salt and soda: 1 level teaspoonful of salt and 1/2 level teaspoonful of baking soda to each quart of water (neither hot or cold). Allow victim to sip slowly about 4 ounces (a half of glass) over a period of 15 minutes. Discontinue fluid if vomiting occurs. (Do not give alcohol.)

2. Less severe burns - (1st & 2nd degree)

   a. Apply cool (not ice cold) compresses using the cleanest available cloth article.
   b. Do not break blisters, remove tissue, remove adhered particles of clothing, or apply salve or ointment.
   c. Apply clean dry dressing if necessary.
   d. Treat victim for shock as required.
   e. Arrange transportation to a hospital as quickly as possible.
   f. If arms or legs are affected keep them elevated.

REFERENCE: ILLINOIS HEART ASSOCIATION

AMERICAN RED CROSS STANDARD FIRST AID AND PERSONAL SAFETY MANUAL (SECOND EDITION)

TABLE OF CONTENTS

SECTION I INSTALLATION

SECTION II THEORY OF OPERATION

TABLE OF CONTENTS

LIST of TABLES

LIST of ILLUSTRATIONS

SECTION I

GENERAL

These instructions contain information needed to install, configure, operate, and maintain the Medalist-12. The manual is divided into four main sections:

1. Installation
2. System Configuration
3. Operation
4. Technical

Carefully unpack and inspect the following:

1. Console mainframe (less attenuators)
2. Installation kit
3. Rack mounted power supply and 25′ cable
4. 12 Attenuator modules (ordered separately)

Throughout the installation section references are made to the Configuration section. It is not meant that one should jump back and forth between the two and disrupt continuity, but read and understand completely the Installation Secton first, before proceeding.

INSTALLATION

NOTE

READ THIS SECTION COMPLETELY, BEFORE BEGINNING ACTUAL INSTALLATION.

The following tools will be required:

1. Assortment of screwdrivers both phillips and flat blade
2. Twisted shielded pair cable (Belden #8451 or equivalent)
3. Cable strippers and cutters
4. Electric drill
5. Drill bits 2", 1", 3/16"
6. Soldering iron 25-35W; solder

MECHANICAL

Before installing the attenuator panels and with the console top hinged up, note that the bottom of the console is punched with the following holes:

1. Two 2" holes toward the rear for high level inputs and outputs.
2. Two 2" holes toward the front for high level inputs and outputs if the rear 2" holes are blocked by microphone preamps.
3. Ten 1" holes toward the rear for individual microphone feeds if they are to be separated from the higher level feeds.
4. Ten 1" holes toward the front for remote machine start wiring.
5. Four 0.187" (3/16") mounting holes.

Locate and place the console precisely in the spot where it will be located. Using the console as a template mark the locations of all 28 holes.

Remove the console and cut or drill all holes through the mounting surface. Note: 1/2" holes centered within the twenty 1" holes will usually be large enough. The remaining holes should be cut exactly. Even if you do not plan to use all cabling holes it is wise to cut or drill all of them because it is very difficult to add holes once the console is wired.

Place the console over the holes again and secure it to the mounting surface with four #8 screws. Mount the power supply in a rack and run 25′ cable from the rear of the supply to the rear of the cable.

Install the optional remote start switches at this time. Remove the plug buttons along the front of the console and press in the switches until they seat securely. Any number of switches up to ten may be installed. Remove only those plug buttons which are to be replaced by switches.

ATTENUATOR INSTALLATION

Plug each attenuator module into the chassis mounted socket located in the center of each channel. These plugs are polarized with beveled corners on one narrow edge and a "V" slot on the opposite. Secure plate with black screws packaged in the installation kit. These are thread rolling and form 6-32 threads without cutting any metal. Using a #2 phillips screwdriver, apply slight downward pressure and turn clockwise while keeping screw vertical to mounting surface.

ELECTRICAL

Refer to Figure 1-1 and acquaint yourself with the names and locations of the circuit boards. While doing so, inspect for any cables that may have been jarred loose during shipment. Be sure to check the 10 conductor ribbon cables terminating on the Input Select boards. Gently pull each of these to verify connection at opposite end has remained intact. Board removal is necessary if any of these have become disconnected. This procedure will be discussed in the Configuration section under Input Select.

LEVELS

Table 1-1 lists nominal input and output levels of the Medalist-12. If levels other than those listed will be used, board modification is required. Instructions will be presented in the Configuration Section.

TABLE 1-1

Tape Inputs	+4dBv
Mic Inputs	-60 to -40dBv variable
External Inputs	-10dBv
Pgm/Aud Outputs	+8dBm
Monitor Output	-10dBv

A chart will be needed to facilitate the wiring and modifying of the console. This chart should contain the following information: Source names and nominal output levels: channel connection; and desired console output level if other than +8dBm.

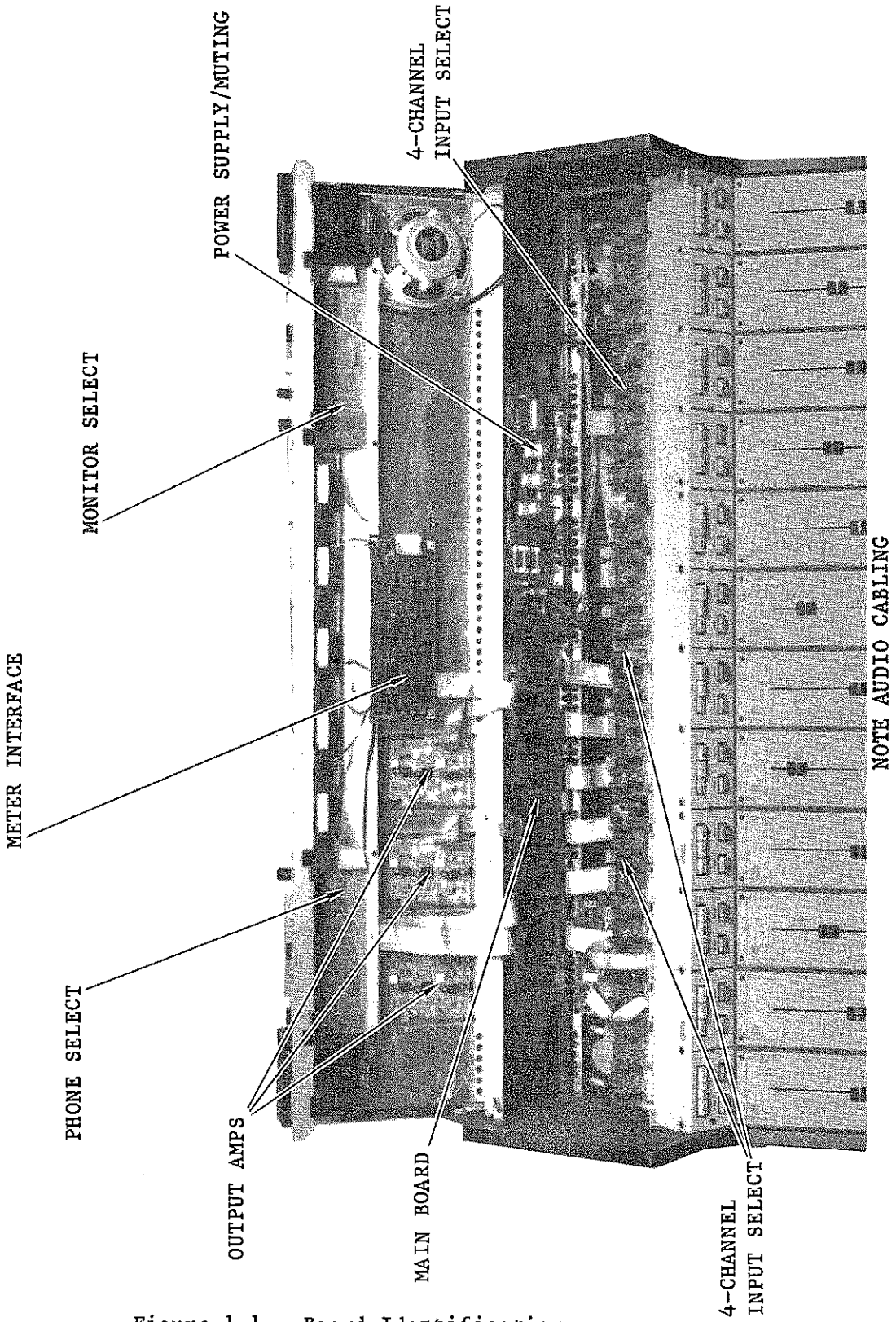

Figure 1-1. Board Identification

WARNING: Disconnect primary power prior to servicing

In many instances nominal source levels are unknown. A convenient method to measure these levels is to use the Medalist-12. A description is given below.

METHOD 1. Temporarily connect the source to one of the input channels using Table 1-2 for correct terminals. With program material playing, adjust channel attenuator to acheive a desired VU indication. Disconnect the source from the console being cautious not to alter attenuator position. Connect a 1KHz generator at a known +4dBm level to the same input that the source was removed. Adjust generator level to acheive 0 VU indication. Record generator output level on chart.

METHOD 2. Connect source as in Method 1. With linear attenuators read directly from fader the amount of gain or attenuation in dB from nominal position (indicated by a dash at 15dB point). With rotary attenuators the nominal position is a dash at 1:30 o'clock. Each radius line is approximately 4dB and is accurate from the 10:00 o'clock position to zero.

CABLE ROUTING AND TERMINATION

The design of the Medalist-12 has been thoroughly tested in high AM & simulated FM RF fields in excess of 150V/meter with AM noise down 50dB (FM band) with negligible degradation of noise or signal quality. The cabling techniques described are proven and adherence to them will provide an installation free from RFI problems. All audio cables entering or exiting will route through two large holes toward the rear of the console. Forming a semicircle around each of these is a large bus wire. The drain wire of each cable should be connected to it.

NOTE

KEEP THIS DRAIN WIRE AS SHORT AS POSSIBLE.

In order to maintain the excellent crosstalk performance of the Medalist-12, cable shielding should remain continuous throughout its length. This presents a slight problem since the drain wire must connect to the bus as it enters the console. Figure 1-2 shows a technique of gaining access to the drain wire at a point along the cable run.

About 5 feet from the console end of the cable, remove approximately 1/2" of the outside jacket, being careful not to cut drain wire. Using a pointed object, pry the drain away from the foil shield just far enough to loop a jumper through. Solder, however many are needed, 1 inch jumpers to the bus wire inside the console. As cables are brought into the console, loop the jumper around the drain and solder. Cables that will terminate at medium level input selectors should be dressed flat against the endbells, brought forward and across the sheet metal directly in front of the notches.

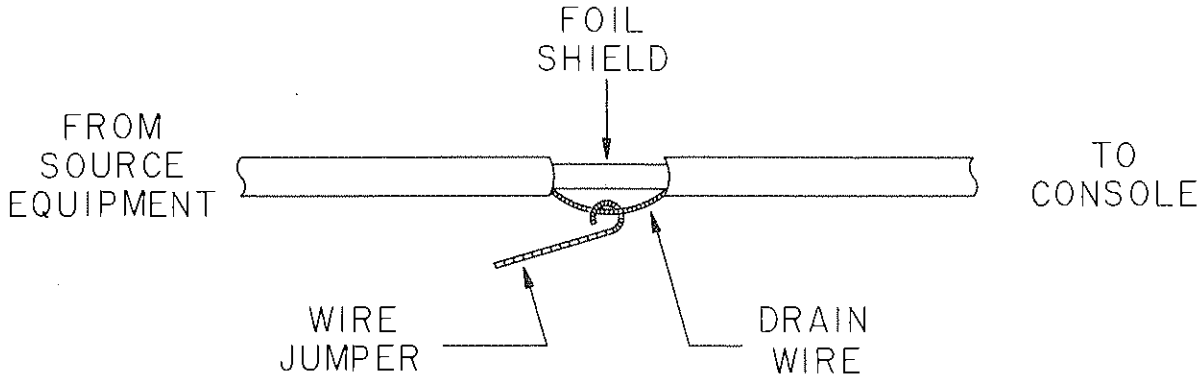

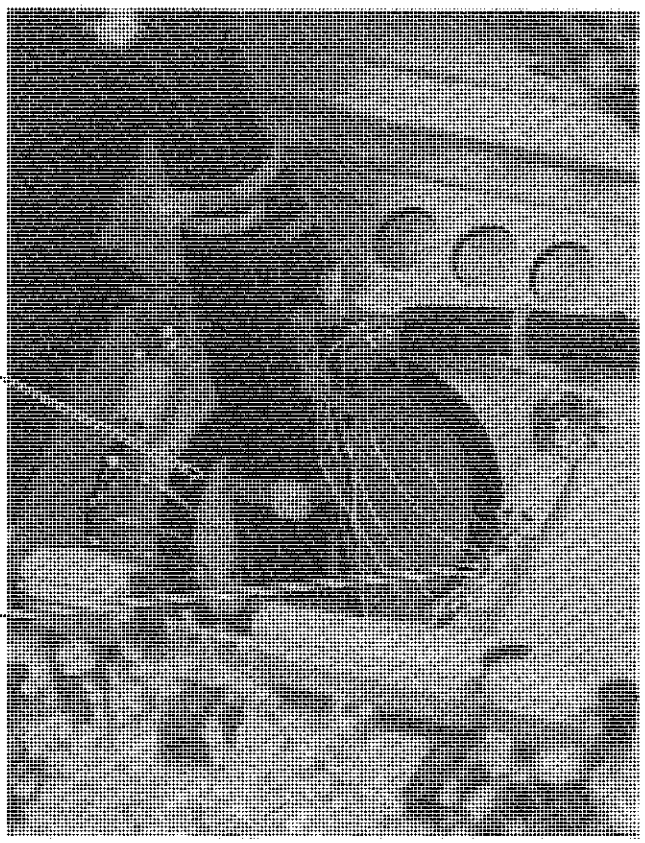

Figure 1-2. Drain Wire Access

WARNING: Disconnect primary power prior to servicing

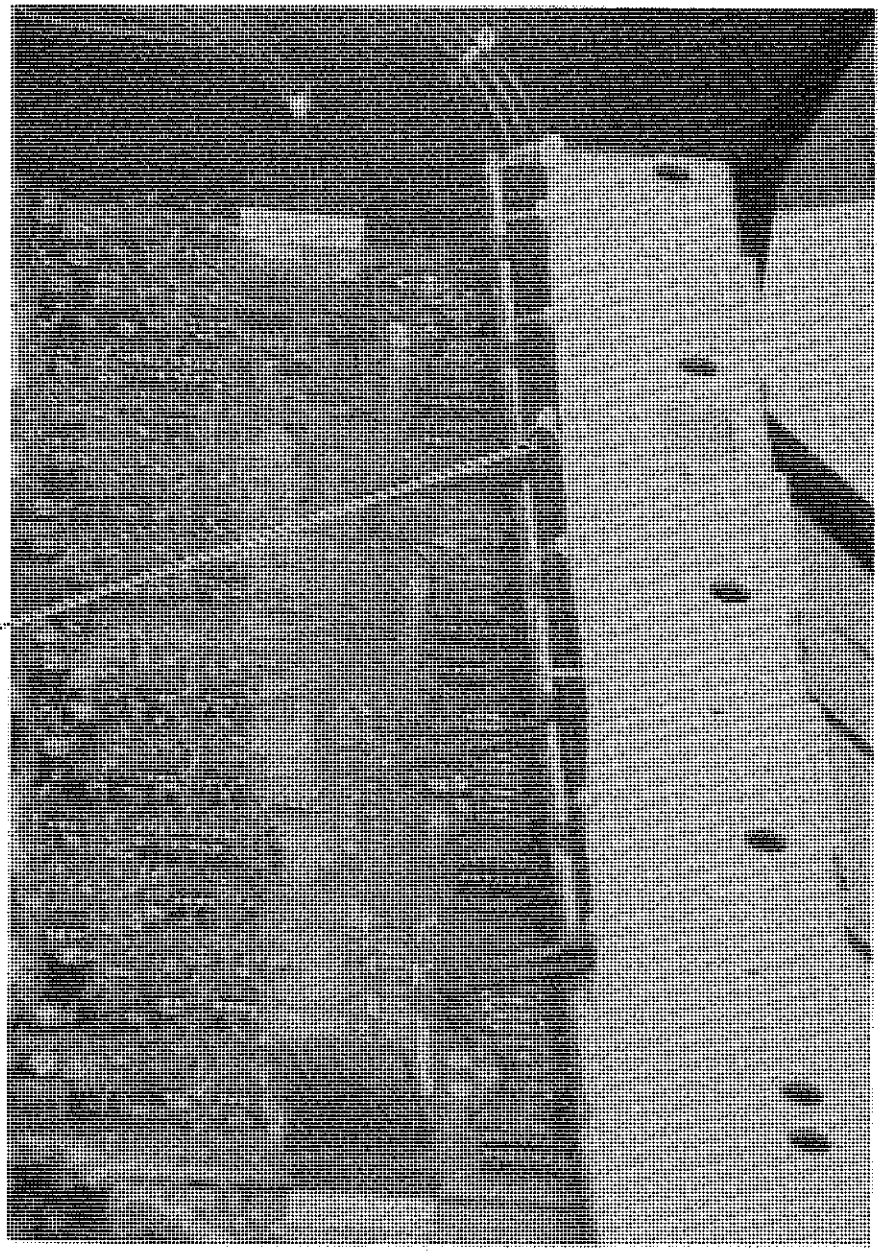

Figure 1-3. Typical Cable Layout

WARNING: Disconnect primary power prior to servicing

WIRE PREPARATION
(DO NOT STRIP)

STEP 1

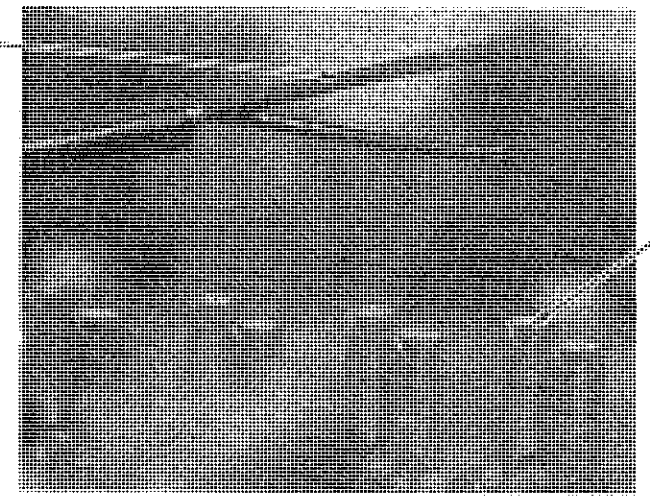

BARREL
TERMINAL

STEP 2
WITH WIRE PARALLEL, SET CONDUCTOR IN "V" AND PRESS STUFFER CAP IN PLACE USING FINGER PRESSURE

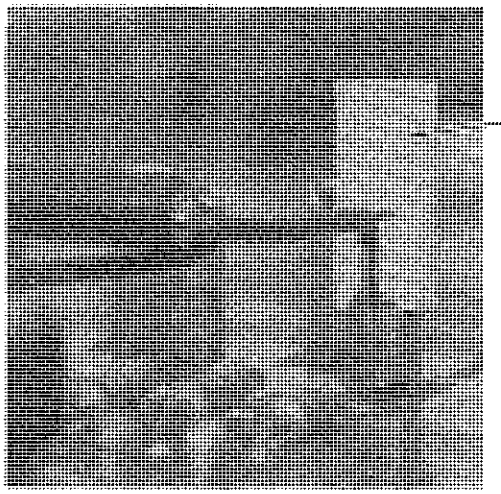

STUFFER
CAP

STEP 3
DRIVE STUFFER CAP TO BOARD SURFACE USING PHILLIPS SCREWDRIVER

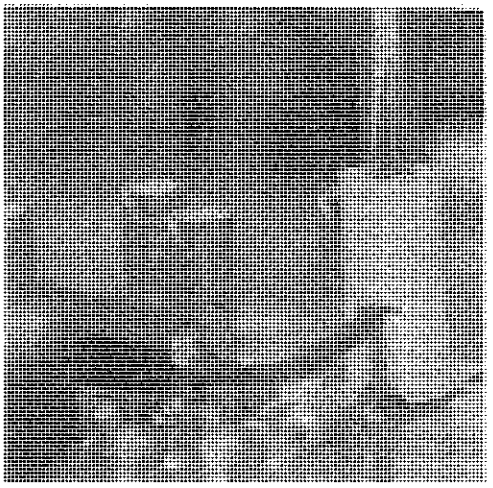

TERMINATION IS COMPLETE

Figure 1-4. Signal Line Termination

WARNING: Disconnect primary power prior to servicing

Outputs and external inputs should be routed through the hole on left side. Refer to Figures 1-1 & 1-3 for a typical cable layout.

All signal lines connect to Amp Barrel Terminals. These terminations are insulation displacement and require no soldering or special wire preparation and provide a reliable gas tight connection. Refer to Figure 1-4 for instructions.

Barrel terminals are quite rugged and may be used many times. In case of a wiring error or change in source location simply remove the stuffer cap and pull wire vertically from slot with needle nose pliers. Cut wire just behind the cut insulation and connect as before.

INPUT SELECT ORIENTATION

A Channel Input Select board may be described as having four separate channels of identical circuitry. Lable them A, B, C, and D. Component designators associated with channel A are numbered R1, R2, R3, etc. The identical components in channel B are numbered R101, R102, R103, etc. Similar components in channels C and D are numbered R201, R202, R203, etc and R301, R302, R303, etc respectively.

WIRING THE CONSOLE

As indicated in Figure 1-1 there are three 4-channel input select boards.

Refering to previously generated chart, identify any line level inputs with nominal levels other than +4dBv and note to which channels they will be connected. These input stages will need to be modified. Proceed to the CONFIGURATION SECTION and modify necessary channels according to instructions given under INPUT SELECT heading. If any of the 10 conductor ribbon cables were found to be disconnected, follow instructions for board removal and reconnect them. Following all input channel modifications wire inputs according to Table 1-2.

It should be noted that in some instances a source will require termination with a specific impedance (console input impedance is greater than 8K ohms). Often, termination is easily performed at the source but it is also possible to terminate at the console input. Since the barrel terminals will accept two wires, a 1/4W resistor may used along with the signal lines. Refer to Figure 1-4 for instructions.

TABLE 1-2

INPUTS

				R-	R+	L-	L+
Channel	1,5,9	Input	1	E1	E2	E3	E4
Channel	1,5,9	Input	2	E5	E6	E7	E8
Channel	1,5,9	Input	3	E9	E10	E11	E12
Channel	2,6,10	Input	1	E13	E14	E15	E16
Channel	2,6,10	Input	2	E17	E18	E19	E20
Channel	2,6,10	Input	3	E21	E22	E23	E24
Channel	3,7,11	Input	1	E25	E26	E27	E28
Channel	3,7,11	Input	2	E29	E30	E31	E32
Channel	3,7,11	Input	3	E33	E34	E35	E36
Channel	4,8,12	Input	1	E37	E38	E39	E40
Channel	4,8,12	Input	2	E41	E42	E43	E44
Channel	4,8,12	Input	3	E45	E46	E47	E48

MICROPHONE PREAMP

As supplied from the factory, the microphone preamps are mounted adjacent to channels 4 and 6 and plugged into the same. The length of cable supplied allows connection to a channel on either side without physically moving the board (i.e. a microphone preamp adjacent channel 4 may be connected to channel 3, 4, or 5). If a microphone assignment requires the board to be moved, follow the steps outlined below. When a microphone is installed in a channel it is automatically connected to input 1 while inputs 2 and 3 remain useable for line level inputs with some restrictions. Simultaneous use of microphone and line inputs is discussed in the Configuration Section under Input Select. Microphones are connected directly to the preamps barrel terminals, high side to E1 and low side to E3. Solder shield to bus wire at access hole keeping lead as short as possible.

REMOVING A MICROPHONE PREAMP

Make certain power is OFF to the console. Unplug the 16 conductor cable from the Input Select board. Remove the 4 retaining screws and and the board from the console.

INSTALLING A MICROPHONE PREAMP

Using the 4 screws provided, secure the board in its desired position on the console deck. Locate the correct input socket (J2, J102, J202, or J302 depending on the selected channel). Note the dot indicating pin 1 of the input socket. The colored tracer on the ribbon cable from Mic Preamp card indicates pin 1 on the plug. Install ribbon cable with cable coming to socket from right hand side of the console when viewed from top standing in front of console. Make certain plastic header is not offset towards the front or back of console. See Figure 1-5.

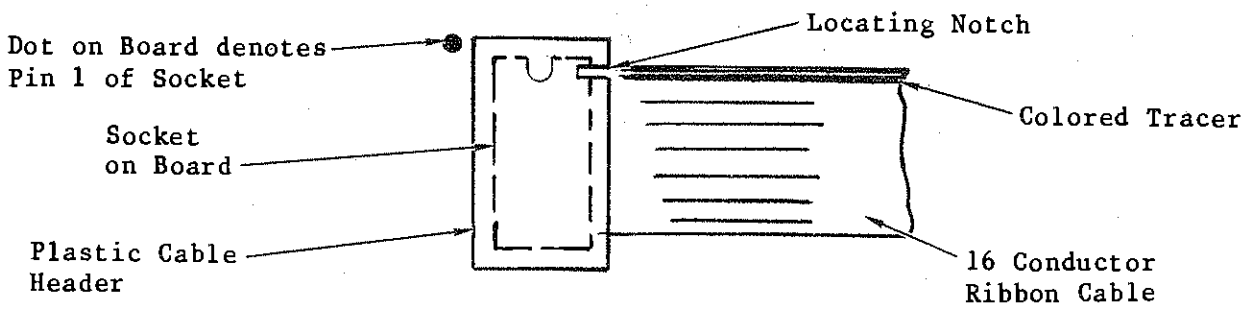

Figure 1-5. Microphone Preamp Plug Alignment

MUTING ASSIGNMENT

Note the 4 section DIP switch in J301 (ch 4) left Input Select board and J101 (ch 6) center Input Select board. These switches provide convenient user selection of muting assignments. If a mic preamp has been moved to a different channel, unplug the switch from the socket and install it in JXX1 of the new channel. For example, if the mic preamp originally in channel 4 has been moved to channel 9, unplug the switch from J301 (adjacent ch 4) and install it in J01 adjacent channel 9 on the right Input Select board.

GAIN ADJUSTMENTS

Gain is adjustable over a 20dB range using R14 and will accommodate microphone levels from -60dBv to -40dBv. In applications where this is inadequate or an effects loop is required, refer to the Configuration Section under Mic Preamp.

EXTERNAL INPUTS

For monitoring purposes, three balanced external inputs are provided; two of these (EXT 1, EXT 2) are stereo while the other (NET) is mono. These circuits provide network and off-air monitoring independent of the main buses. EXT 1 and NET are available through both Phone and Monitor Select, while EXT 2 is only available through Monitor Select. Nominal input level for all external inputs is -10dBv, but may be modified to accept higher levels. See External Inputs heading in Configuration Section. The stereo inputs are bridging (greater than 8K ohms) and Net provides a 600 ohm termination. Connections are made to a vertical row of barrel terminals at the left edge of the Main Board. If desired, any of these inputs may be bridged to an input channel. Table 1-3 lists input connections.

TABLE 1-3

EXT 1L	+E6	-E4
EXT 1R	+E9	-E7
EXT 2L	+E12	-E10
EXT 2R	+E15	-E13
NET	+E3	-E1

MONITOR OUTPUT

Monitor Out is a single ended output for driving 600 ohm or greater loads such as a power amplifier. With the monitor level control set at a normal 1 to 2 o'clock position, the VU meter reading 0 VU, an output level of about 250mV is produced, with 12-15dB gain-in-hand remaining. Connections are in the upper left corner of the Main Board and are listed in Table 1-4.

TABLE 1-4

L signal	E16
L signal gnd	E17
R signal	E20
R signal gnd	E19

OUTPUT AMP

Three stereo Output Amps are provided. The one on the left is Program Out with Audition Out adjacent to it. Nominal level is +8dBm into 600 ohms, 0dBm and +4dBm are available with a resistor change. See Output Amp heading in Configuration Section. Connections are given in Table 1-5.

TABLE 1-5

L+	E2
L-	E3
R+	E5
R-	E6

CAUTION

MONO SUM

COMBINING R & L OUTPUT CHANNELS

CAUTION

STRAPPING R AND L OUTPUT CHANNELS TOGETHER CAN CAUSE HIGH DISTORTION AND EVENTUAL AMPLIFIER FAILURE

The preferred method of obtaining L+R output is to install the optional mono/sum amplifier for this feed. If only one stereo and one mono feed is required, the unused stereo audition amplifier may be moved to the mono/sum position.

CAUTION

SINGLE ENDED
NON BALANCED LOADS

The preferred method of connecting the Medalist-12 to an one-side-grounded unbalanced load, such as some automation systems and low priced tape recorders, is to use only half of the output. Connect the high side of the amplifier output to the high side of the load and the ground (E4) to the grounded side of the load, leaving the low side of the amplifier (E3 and/or E6) unconnected to prevent amplifier failure, 6dB net loss. See Figure 1-6.

An alternate protection mode is possible by installing 300 ohm resistors in R8, R10, R22 and R24. One-side-grounding will cause no problem in this configuration; however, you will suffer a 9 db net loss.

Misconnecting the output amplifier(s) of the console to a single ended/ one-side-grounded unbalanced load will cause high distortion levels in the main output and in all likelihood, eventual destruction of the IC chip. See Figure 1-6.

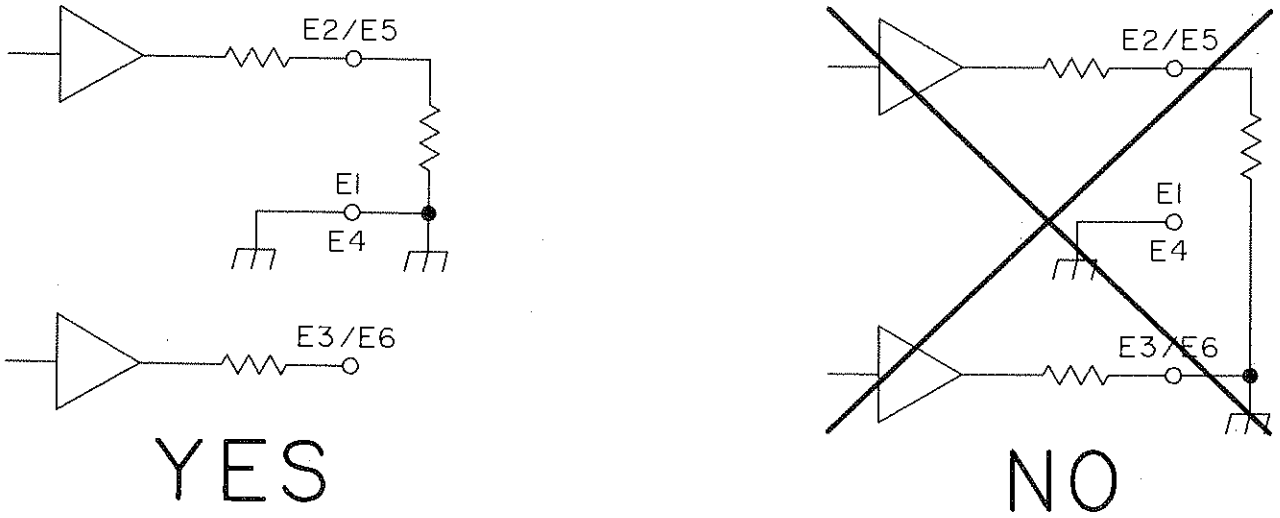

Figure 1-6. Single Ended, Non Balanced Loads

For a mono output and/or remote program cue, the third Output Ampilfier is used. The mono output signal is provided via terminals E2 and E3.

If more than one mono/sum output is needed, or if it must be independent of the PGM/AUD input selector switch, a stereo output amplifier may be modified for strapping the outputs together without degrading the signal or causing amp failure. See Figure 1-7.

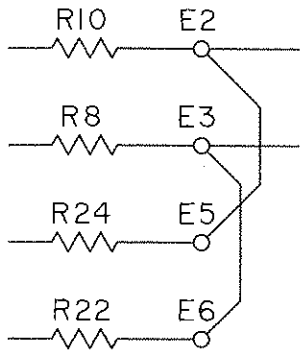

Figure 1-7. Stereo Output Strapped for Mono/Sum Output

Change R8, R10, R22 and R24 from 10 ohms to 300 ohms each. This will give approximately 3 db net loss with predominantly in-phase stereo L and R signals, and will provide full protection for the output amplifier so connected.

REMOTE PROGRAM CUE

Remote program cue is possible to inputs 2 and 3 of channels 11 and 12 via the third Output Amplifier. It is necessary to connect terminals E5 and E6 of this Output Amplifier to terminals E1 and E2 of the Power Supply/Muting board. Connect E5 of the Output Amp to E2 of Power Supply/Muting and E6 on the Output Amp to E1 of Power Supply/Muting.

Selection of inputs 2 or 3 and channels 11 and 12 is done via DIP switches located in sockets J203 and J303 on the Input Select board. To activate program cue function, sections of DIP switches installed in J203 and J303 will be closed. Refer to Table 1-6.

Selection of the program cue signal is via the front panel MONO PGM/AUD switch, which is sent back down the remote lines ONLY when the Input Select switch is in the OUT position.

TABLE 1-6

Ch 11	Input 2	Close 1, 2 of J203
Ch 11	Input 3	Close 3, 4 of J203
Ch 12	Input 2	Close 1, 2 of J303
Ch 12	Input 3	Close 3, 4 of J303

MUTING

Relay contacts are provided for three locations of speaker muting and warning light operation. The DIP switch in JXX1 of channels into which mic preamps are connected control the selection of muting assignments. Section 1 controls the control room; section 2 controls studio 1; and section 3 controls studio 2 (section 4 is not used). Speaker wires and warning lights are connected to 4 terminal blocks on the Power Supply/Muting board according to silkscreen.

REMOTE START SWITCHES

Mounting provisions have been made to permit installation of remote start switches. Mounting of these switches was discussed in the mechanical portion of this section. All wiring should follow the specific manufacturer's instructions.

The large holes toward the front of the console should be used for cable entrance. Keep these lines apart from signal carrying wires to avoid possible interference.

SYSTEM GROUNDING

Little has been said on grounding in these instructions. Many texts have been written on this complex and sometimes mystifying subject and most agree that a single point or star system is best. Totally valid in a theoretical context, incorporating a true star system within existing construction is usually impractical if not impossible. This partially explains why grounding is generally a trial and error process.

There are no magical fixes or cures in grounding, but by following a few basic rules this task can be manageable.

1. All equipment that will connect to the console should be powered by the same, single phase independent feed. Soda machines, typewriters, video games, lights etc MUST NOT receive their power from this line.

2. A heavy ground strap should connect to the ground plate of the AC power panel. By the shortest possible route, the other end connects to the brass stud inside the console. This stud is now the common reference point for all equipment.

Following these guidelines will not miraculously cure all grounding problems but adherence to them will allow a logical approach to be applied in solving them.

An excellent article by Thomas M. Hay, titled "Differential Technology in Recording Consoles and the Impact of Transformerless Circuitry on Grounding Technique" provides an in depth discussion and practical solutions to system grounding. Write directly to: Audio Engineering Society, 60 East 42nd Street, New York, NY 10017 and ask for ordering information of "AES preprint 1723 (C-3)". This concludes the installation portion of the manual.

CONFIGURATION

This section provides detailed instructions on modifying the Medalist-12. The need for modifications arises when source levels differ from nominal console levels. All modifications involve resistor changes and should be completed prior to console wiring, if possible.

Most installations will require some changes to the Input Select board and depending on the number of different source levels may be time consuming. Use the chart previously generated to determine channels needing

modification. Board removal is necessary to perform these modifications. Several methods are generally used to remove components from printed circuit boards. The only problems usually encountered are the lifting of pads caused by excessive heat. A 25W pencil type iron is adequate and will minimize the possibility of board damage.

Higher wattage irons are not recommended and soldering guns should NEVER be used. The spring loaded soldered sipper does not work well on the thick board material used in the Medalist-12. Two alternate methods of component removal are recommended.

1. From the top side of the board; heat the component lead and pad while lifting component lead with needle nose pliers; clean plated through hole with desoldering braid or solder sipper.

2. Use desoldering braid from bottom of board according to manufacturers instructions

On the single sided boards braid or solder sippers work well. Use only rosin core solder to install components.

INPUT SELECT

Board orientation:

1. Front the edge on which switches are mounted
2. Rear opposite to front where connectors are located
3. Left and Right are referenced from an operator's position facing the console

Board removal: 4 Channel Input Select (left side)

1. Disconnect two 26 conductor ribbon cables
2. Disconnect 12 conductor power cable
3. Remove three black screws from center of switch panel, one to the left of ch 1, one between ch 1 and 2, and one between ch 3 and 4.
4. Remove three screws along rear edge.
5. Carefully slide board toward rear of console until switch buttons clear sheet metal; swing front of board vertically.
6. Unplug four 6 conductor cables and remove board from console.

The other Input Select boards are removed in a similar manner. Figure 1-8 is a simplified schematic of a single input channel. The components shown with reference designators and standard values are ones that may need changing (right component designators are in parenthesis). Recall, that depending on channel, the reference designators will be proceeded with a 1, 2, or 3 (i.e. R113, R213, R313, etc). Figure 1-9 shows relative location of components on the board. The following operational description should be studied while using Figure 1-8 as a reference.

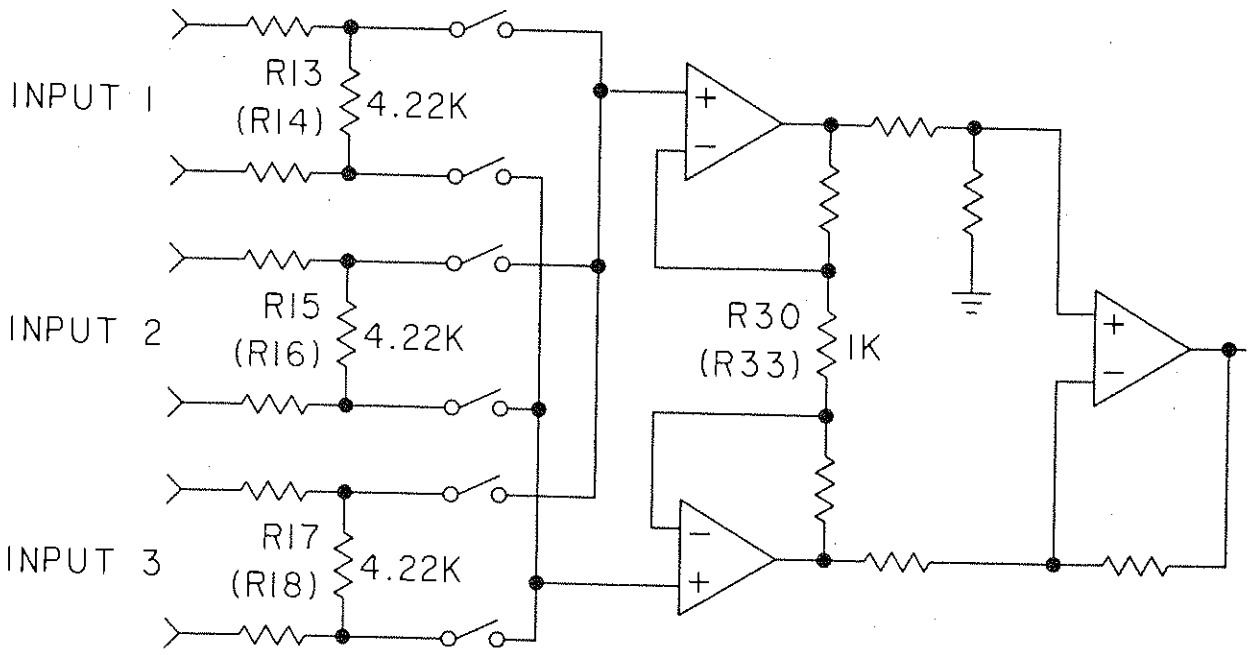

Figure 1-8. Input Channel Simplified Schematic

Each input to a channel is padded a fixed amount prior to the select switch. Following the seitch is a differential amplifier common to all three inputs. It follows that a pad may be adjusted independently for each input, while adjusting the gain of the amplifier effects all inputs equally. These two circuits will be modified to change the input sensitivity of the MEDALIST-12 with two restrictions. The attenuation of the pad may only be increased in relation to its fixed value, and the gain of the amplifier may only be increased in relation to its fixed value. The absolute values of the pad and amplifier are of no concern at this time and will be discussed in the Technical Section.

Admittedly, the gain and attenuation of these stages could be reduced, but doing so would have adverse affects on input impedance, RFI characteristics, and noise performance of the console and will not be discussed.

Tables 1-7 and 1-8 list standard 1% resistor values for increasing gain and attenuation in 1 dB increments. If 1% resistors are not readily available, any 5% value, 1/4W resistor may be used that is close to the attenuation value desired with less than a dB loss in accuracy. However, each resistor must be matched (measured) so that both left and right pads will have the same attenuation. Input sensitivities from -20 dBV through +10 dBV are easily handled on the MEDALIST-12. An example will be used to describe the modification procedure.

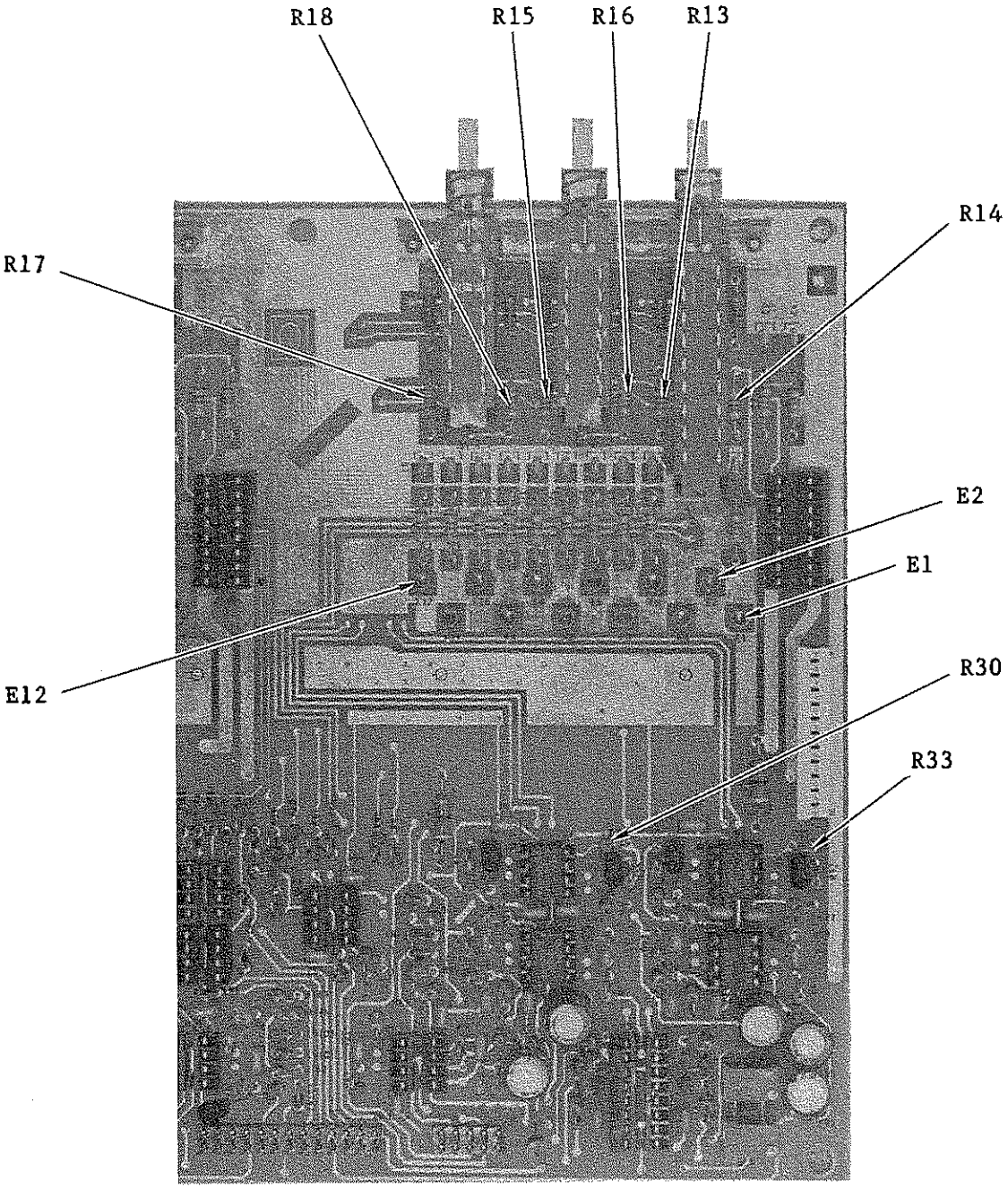

Figure 1-9. Component Location (Partial)
Input Select (4 or 2 Channel)

WARNING: Disconnect primary power prior to servicing

Example

Three sources are to be connected to Channel 2 with the following levels:

Input 1	-20 dBV
Input 2	-5 dBV
Input 3	+10 dBV

Step 1 Add attenuation to inputs 2 and 3 so their levels are equal to the lowest source level.

Step 2 The amount of attenuation required to inputs 2 and 3 is 15 dB and 30 dB respectively. From Table 1-8 find the resistor values necessary to add this amount of attenuation (340-ohm and 54.9-ohm).

Step 3 Now that all inputs are effectively at a -20 dBV level, from Table 1-7 find the resistor value required to increase this level to the nominal console level of +4 dBV (45.3-OHM).

In Channel 2, replace the following resistors with the new values as indicated below:

Input 1	R113, R114	No change
Input 2	R115, R116	340-ohm
Input 3	R117, R118	54.9-ohm
Gain	R130, R133	45.3-ohm

Although it is doubtful that the situation described above would occur in practice, it is a demonstration of the input capabilities of the MEDALIST-12. One should fully understand the above example before attempting any modifications. The following items may help to clarify:

1. Gain modifications are needed only when an input is below +4 dBV.
2. When one or more inputs to a channel are below +4 dBV, normalize the others to the lowest level using Table 1-8.
3. Increase the amplifier gain by the amount the adjusted input level differs from 4 dBV, using Table 1-7 values for resistors R30 and R33.
4. If all inputs are equal to or greater than +4 dBV, use Table 1-8 and adjust individual pads on each input.

TABLE 1-7

GAIN

To increase gain by	Change resistor value to
1 dB	866-ohm
2 dB	732-ohm
3 dB	634-ohm
4 dB	549-ohm
5 dB	475-ohm
6 dB	412-ohm
7 dB	365-ohm
8 dB	316-ohm
9 dB	280-ohm
10 dB	243-ohm
11 dB	215-ohm
12 dB	191-ohm
13 dB	169-ohm
14 dB	147-ohm
15 dB	130-ohm
16 dB	115-ohm
17 dB	102-ohm
18 dB	90.9-ohm
19 dB	80.6-ohm
20 dB	71.5-ohm
21 dB	63.4-ohm
22 dB	57.6-ohm
23 dB	49.9-ohm
24 dB	45.3-ohm

NOTE

THIS TABLE IS SHOWN WITH 1% RESISTOR VALUES FOR ACCURACY. IF YOU DO NOT HAVE ACCESS TO SUCH TOLERANCE RESISTORS, ANY 5% VALUE MAY BE USED THAT IS CLOSE TO THE ATTENUATION VALUE YOU DESIRE. HOWEVER, YOU SHOULD MATCH (MEASURE) EACH RESISTOR, SO THAT BOTH LEFT AND RIGHT PADS WILL HAVE THE SAME ATTENUATION.

TABLE 1-8

ATTENUATION

To increase attenuation by	Change resistor value to
1 dB	3.24K-ohm
2 dB	2.55K-ohm
3 dB	2.10K-ohm
4 dB	1.74K-ohm
5 dB	1.43K-ohm
6 dB	1.24K-ohm
7 dB	1.05K-ohm
8 dB	887-ohm
9 dB	768-ohm
10 dB	665-ohm
11 dB	576-ohm
12 dB	511-ohm
13 dB	442-ohm
14 dB	392-ohm
15 dB	340-ohm
16 dB	301-ohm
17 dB	267-ohm
18 dB	232-ohm
19 dB	205-ohm
20 dB	182-ohm
21 dB	162-ohm
22 dB	143-ohm
23 dB	127-ohm
24 dB	113-ohm
25 dB	100-ohm
26 dB	88.7-ohm
27 dB	78.7-ohm
28 dB	69.8-ohm
29 dB	63.4-ohm
30 dB	54.9-ohm

NOTE

THIS TABLE IS SHOWN WITH 1% RESISTOR VALUES FOR ACCURACY. IF YOU DO NOT HAVE ACCESS TO SUCH TOLERANCE RESISTORS, ANY 5% VALUE MAY BE USED THAT IS CLOSE TO THE ATTENUATION VALUE YOU DESIRE. HOWEVER, YOU SHOULD MATCH (MEASURE) EACH RESISTOR, SO THAT BOTH LEFT AND RIGHT PADS WILL HAVE THE SAME ATTENUATION.

When intermixing mic and line inputs on the same channel, increasing gain is not recommended. Use only line levels of +4 dBV or greater and increase attenuation accordingly. Increasing gain under these conditions will

slightly affect the noise performance of the console. Upon completion of modifications, install the Input Select Board in the console in reverse sequence of removal. Insure the 10 conductor ribbon cable is securely fastened on the 2 Ch. Assignment Board.

Complete all modifications to Input Select boards as necessary, and return them to the console before continuing with this section.

EXTERNAL INPUTS

The external inputs are designed for a nominal -10dBv level. The addition of a single resistor will permit up to +10dBv capability. The resistor is soldered between two turret terminals located along the left edge of the Main Board. These terminals are identified with "E" designators as shown in Table 1-9.

TABLE 1-9

EXT 1L	E23, E24
EXT 1R	E25, E26
EXT 2L	E27, E28
EXT 2R	E29, E30
NET	E21, E22

Table 1-10 provides standard 1% resistor values for various input levels ranging from -10dBv through +10dBv.

TABLE 1-10

Input Level	Value
-10dBv	none
-9dBv	8.66K ohm
-8dBv	4.87K ohm
-7dBv	3.32K ohm
-6dBv	2.37K ohm
-5dBv	1.87K ohm
-4dBv	1.47K ohm
-3dBv	1.18K ohm
-2dBv	976 ohm
-1dBv	825 ohm
0dBv	698 ohm
+1dBv	590 ohm
+2dBv	511 ohm
+3dBv	432 ohm
+4dBv	374 ohm
+5dBv	324 ohm
+6dBv	287 ohm
+7dBv	249 ohm
+8dBv	221 ohm
+9dBv	191 ohm
+10dBv	169 ohm

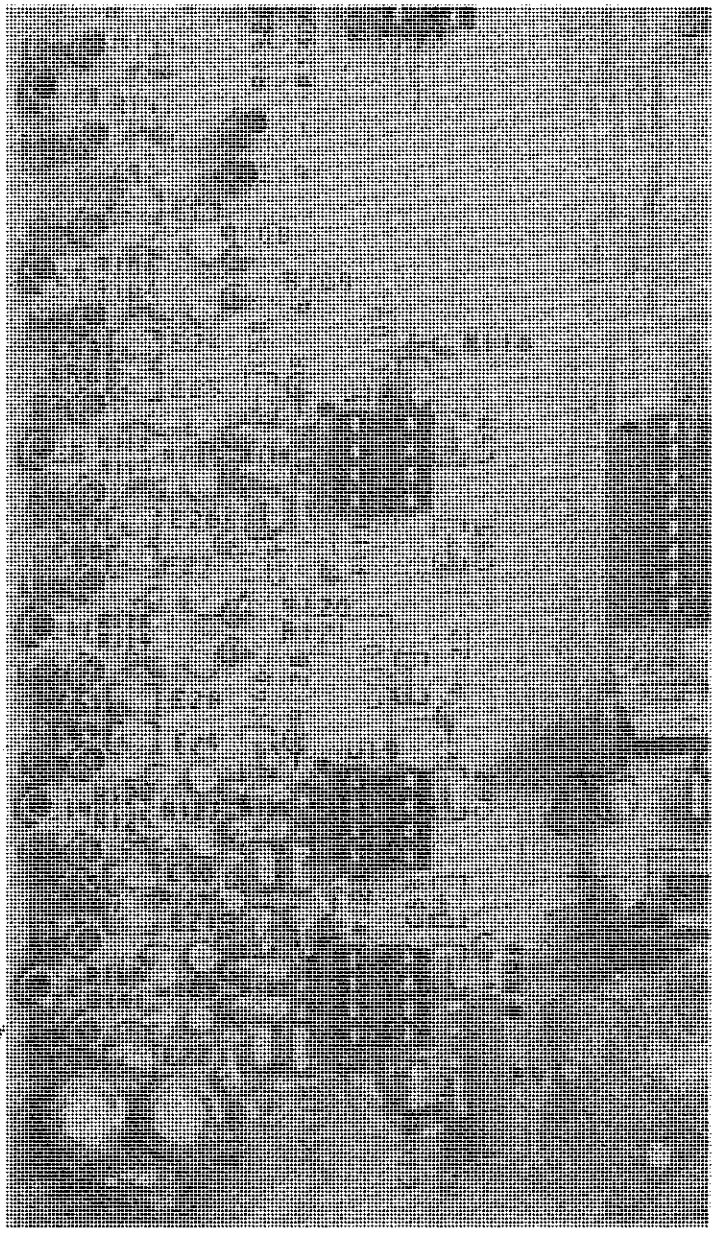

LEFT EDGE

Figure 1-10. Main Board External Inputs

WARNING: Disconnect primary power prior to servicing

Again, Table 1-10 is shown with 1% resistor values for accuarcy. If you do not have access to such tolerance resistors, any 5% value may be used that is close to the attenuation value you desire. However, you should match (measure) each resistor, so that both left and right pads will have the same attenuation. Figure 1-10 shows location of the terminals.

MONITOR OUTPUT

With the level control set at a normal 1 to 2 o'clock position and the VU meter reading 0 VU, approximately 250mV of output level is produced. With 12 to 15dB gain-in-hand available, this output is capable of driving all power amps commonly used today. No circuit modifications are available and any necessary level adjustments should be made at the power amp.

OUTPUT AMP

The Output Amps provide a nominal +8dBm line output and include a buffered meter drive. Nominal output levels of 0dBm and +4dBm are also possible by removing the board from the console and performing one of the following changes.

For 0dBm Output
Change R11, R12, R25, and R26 to 6.34K ohm, 1/4W, 1% resistors; adjust R1 (L) and R15 (R) for 0dBm out.

For +4dBm Output
Change R11, R12, R25, and R26 to 10K ohm, 1/4W, 1% resistors; adjust R1 (L) and R15 (R) for +4dBm out.

NOTE

DO NOT SUBSTITUTE 5% RESISTORS FOR THIS MODIFICATION UNLESS THEY HAVE MATCHED.

MICROPHONE PREAMP

The preamp is factory set for microphone sensitivities in the range from -60dBv to -40dBv. Gain is continuously variable within this range by adjustment of R14. This range will be adequate for most applications, but two other ranges may be incorporated.

High Gain Mode (-70dBv through -50dBv)
Change R12 and R15 to 8.87K ohm, 1/4W, 1%; do not use 5% resistors.

Low Gain Mode (-45dBv through -35dBv)
Change R13 to 47 ohm, 1/4W, 5%

The pan control (R26) is factory set to center and may be adjusted as required. A processing loop is also supplied for the insertion of external effects. The send and receive ports are designed for -10dBv levels; with no adjustment available. To install a processing device:

Remove zero ohm resistor R32.
Connect input of processing equipment to send terminal E4.
Connect output of processing equipment to receive terminal E5.

This is a single ended procesing loop; both send and receive grounds connect to E6.

CONDENSER MIC MODIFICATIONS

When using the 994-8775-001 Mic Preamp board with condenser microphones or any other device that requires a remote power feed above 25V DC, capacitors C1 and C2 will have to be replaced with higher voltage capacitors, adequate for the voltage being used. Refer to Figure 4-11, Mic Preamp Schematic 839-6377-015, in Section IV of this book.

If the supply voltage to the remote mic is positive, then the positive (+) side of the capacitors should be oriented towards E1 and E3.

If the supply voltage to the remote mic is negative, then the negative (-) side of the capacitors should be oriented towards E1 and E3.

Power supply feed resistors should be of a value recommended by the supply vendor and connected to terminals E1 and E3. Ground returns to the supply should be connected to E2.

HEADPHONE

The headphone driver circuits in the Medalist-12 are independently fused, and capable of delivering a minimum of 2W/ch into 8 ohms with program material. The levels produced are more than adequate in many applications; but if fuse replacement is a commom occurrence (indicated by a reduction in level and increased distortion) two choices are available: obtain a more efficient set of headphones or install an external power amplifier.

CAUTION

UNDER NO CIRCUMSTANCES SHOULD THE FUSES BE REPLACED WITH ANYTHING OTHER THAN 1/2A SLOW BLOW.

Installation of an external power amplifier is as follows:

1. Remove the cable from barrel terminals E3, E4, and E5 located on the Power Supply/Muting Board
2. Connect the input of the power amp to: E3(L), E5(R), and E4(gnd install two pairs)
3. Remove attenuator module from channel 10 and remove wires from headphone jack. Do not remove capacitor.
4. Route output from power amp and solder to phone jack. Install attenuator module.

This completes the Configuration section. Return to Installation section and complete all wiring.

OPERATION

The operation of the Medalist-12 is straightforward and requires little explanation. Figure 1-11 is a front panel view and identifies all switch functions; below is a brief description of each.

Input Select:	Selects one of three inputs to be assigned to a channel.
Channel Assignment:	Routes channel to the Program and/or Audition bus.
Cue:	Sends a pre-fader signal of the input selected to the cue bus (operational regardless of fader position).
Mono:	Selects either Program or Audition to be sent to the Mono output.
Phone Select:	Selects one of the following signals to be monitored with headphones: Program, Audition, Mono, Network, Ext 1, or Cue.
Meter Select:	Selects Program, Audition, or Mono (left meter) output level to be viewed on the meters.
Monitor Select:	Selects one of the following signals to be monitored: Program, Audition, Mono, Network, Ext 1, or Ext 2.

To complete the Operation Section, a description of several design features is in order.

The channel gain is VCA controlled, providing excellent tracking characteristics and independance from fader noise. Normal fader life is extended appreciably when used to generate a DC control voltage, as used in the Medalist-12, because of the noise filtering that is incorporated.

To eliminate any unwanted cue signals to be routed to the main buses, the channel assignments of that particular channel are inhibited while the cue switch is engaged. Three conditions must exist for muting to be operable:

1. A channel must be assigned via DIP switches as discussed in the Installation Section.
2. Input 1 of a selected channel must be engaged.
3. The channel must be routed to either Pgm or Aud.

The internal cue speaker is interconnected with the control room muting and is muted along with the monitor speakers. The installation of your Medalist-12 is now complete. Apply power, start a source, and enjoy.

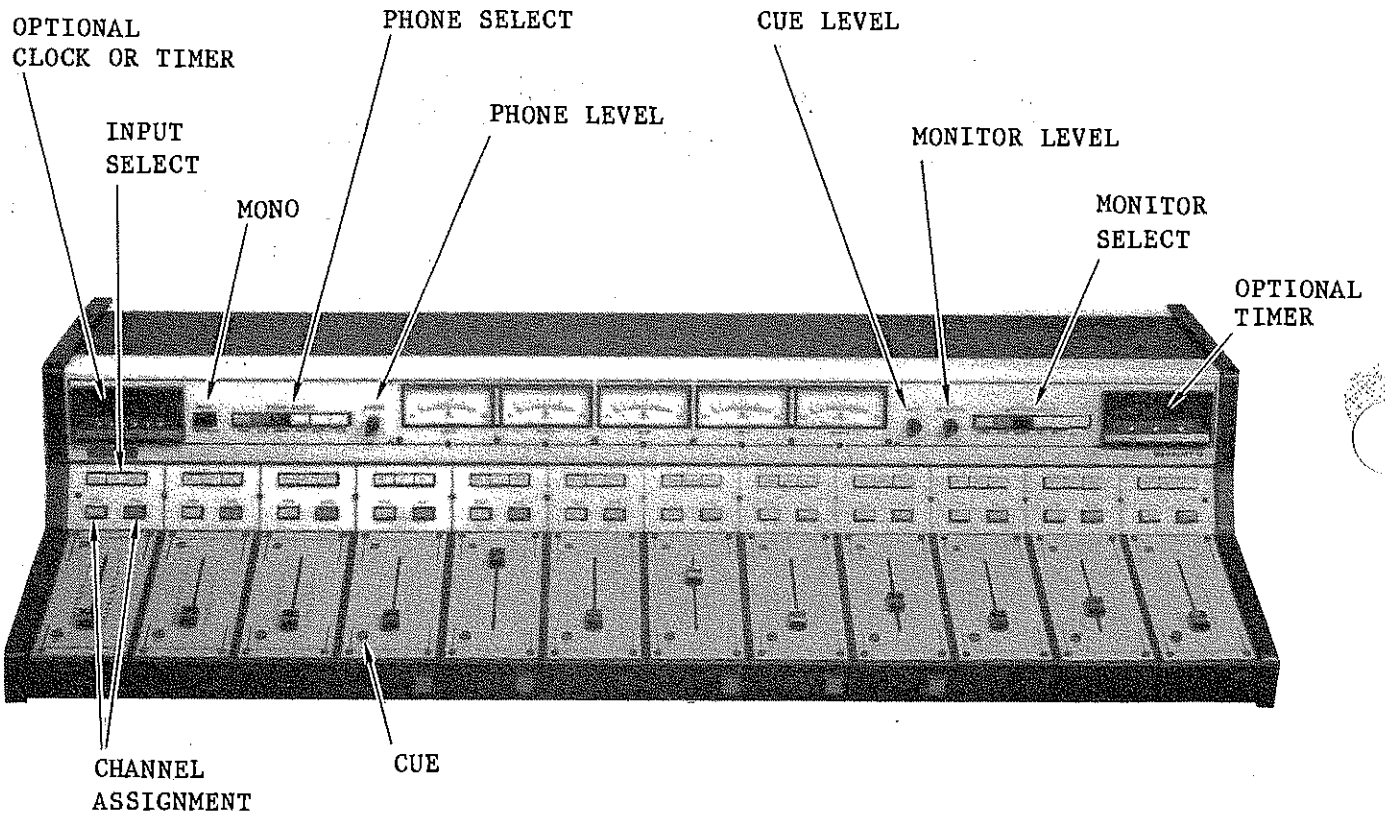

Figure 1-11. Medalist-12 Console, Front View

WARNING: Disconnect primary power prior to servicing

SECTION II

THEORY OF OPERATION

INTRODUCTION

To avoid any confusion in terms, let's define dBv. It is a voltage ratio expressed in dB with .775V as a reference. 0 dBv = .775V.

GENERAL

Throughout this discussion the block diagram (Figure 4-1) and applicable schematics (Figures 4-2 thru 4-17) are used for reference. All input channels are identical except for 9 and 10 which have the added remote program cue feature.

Consider the console as having two signal paths, main and auxiliary. The main signal path consists of input selection, differential, VCA for level control, bus selection and summing, and output driver. Directly relating to the main signal with its associated control logic and the meter buffers.

The auxiliary signal path consists of the external inputs, phone select, monitor select, and muting functions. It is advantageous for for the user to study and throughly understand the block diagram before proceeding.

INPUT SELECT

Left channel is described. Right channel is identical. Each line level input is attenuated by 14 dB prior to switching and amplification. The pad consists of R1, R2, and R′, where R′ is R13 in parallel with the series combination of R5 and R6. C1 and C2 provide RFI filtering. A three op amp instrumentation amplifier (U1 and 1/2 of U2) adds 5 dB of gain bringing the +4 dBv input signal to -5 dBv. The -5 dBv level is used internal to the console and provides 25 dB of internal headroom. U5 is the VCA, a current in, current out device capable of over 100dB of gain adjustment. With the channel fader in the normal position the VCA is at unity gain. The current output of the VCA (U5, Pin 8) is converted to a voltage by U2 and exits the board at P2-26 for bus selection on the main board. The control voltage for the VCA is provided by U7. The First Section receives 0-5 VDC from the wiper of the fader which is applied at U7 Pin 3. The feedback network of the first stage of U7 provides a 3 slope gain function. It is here that the taper is generated. The output U7 Pin 1 is a dc voltage which is a function of fader position and varies from 0 Vdc to approximately 10.5 Vdc. The second stage of U7 scales the voltage and adds a 90mv negative offset. The output of this stage varies from -90mV to (0.5 to 0.6 V), which is fed to the control port (Pin 3) of the VCA. This range of control voltage allows 15 dB of gain (-90mV control) and 85 dB of attenuation (+0.5V control).

The cue signal is taken from the output of the instrumentation amp U2 Pin 1 and summed at U8. The switch shown in the dotted outline is physically located on the fader panel and shown here for clarity. This cue signal is sent to the main board to generate the cue bus. U9 supplies the 5V reference for the fader.

MICROPHONE PREAMP

The microphone preamp is a standard instrumentation amplifier with a low noise discreet front end. Q1 and Q4 are constant sources for each side of the balanced input. Input impedance is set by the series combination of R3 and R4. Gain is set by feedback resistors R12, R13, R14 and R15. With the values shown gain is adjustable from 55 dB to 35 dB..The pan circuit is made up of U2, R24, R25 and R26. With R26 at center of rotation, L and R outputs are 3 dB down from full clockwise or full counterclockwise position. All electrical connections are made thru J1.

MAIN BOARD

Consider the Main Board as a centralized distribution point in the console. It is here that all bus switching and summing takes place. Program and audition signals are routed to output drivers and headphone and speaker monitoring circuits. External inputs are connected and distributed as are cue signals summed.

Signals from the input select boards are received at 26 pin headers, P1 through P5, and routed to the bus switching/summing and cue summing. CMOS switching is used for all bus switching in a configuration that eliminates the possibility of break-over. Each package (U1 to U14) contains three form C switches and operates from +/8V supplied by on board regulators U24 and U25. Control logic is active low, i.e. the control signal is at -8V when channel is selected. The summing amplifiers U15 and U16 supply Program and Audition signals to the output drivers, phone select, and monitor select boards.

VCA REPLACEMENT

If a VCA should ever need replacing a trim adjustment is necessary. Refer to the Input Select board schematic and identify a 50K ohm pot with wiper connected to a 100K ohm resistor and to pin 4 of the VCA. Apply a 1K Hz tone to channel in which VCA replacement was performed. With fader in nominal position, adjust generator output to obtain 0 VU on meter. Monitor program output with distortion analyzer and adjust trim pot for minimum Harmonic Distortion.

SECTION III

PARTS LIST

INTRODUCTION

This section of the Technical Manual provides descriptions, reference designators, and HARRIS part numbers for selected replacable parts and assemblies for proper maintenance of the equipment.

REPLACEABLE PARTS SERVICE

Replacement parts are available 24 hours a day, seven days a week from the HARRIS Service Parts Department. Telephone 217/222-8200 to contact the service parts department or address correspondence to Service Parts Department, HARRIS CORPORATION, Broadcast Transmission Division, P.O. Box 4290, Quincy, Illinois 62305-4290, USA. The HARRIS factory may also be contacted through a TWX facility (910-246-3212) or a TELEX service (247319).

TECHNICAL ASSISTANCE

HARRIS Technical and Troubleshooting assistance is available from HARRIS Field Service during normal business hours (8:00 AM - 5:00 PM Central Time). Emergency service is available 24 hours a day. Telephone 217/222-8200 to contact the Field Service Department or address correspondence to Field Service Department, HARRIS CORPORATION, Broadcast Transmission Division, P.O. Box 4290, Quincy, Illinois 62305-4290, USA. The HARRIS factory may also be contacted through a TWX facility (910-246-3212) or a TELEX service (247319).

Table 3-1. MEDALIST-12 Console, 12 Channel - 994 8835 001

Table No.	Unit Nomenclature	Part No.	Page
3-2	MEDALIST-12 CONSOLE, 12 CHANNEL	994 8835 001	3-3
3-3	MEDALIST-12 CONSOLE, 12 CHANNEL	994 8835 002	3-4
3-4	INPUT SELECT, 4 CHANNEL	992 6165 002	3-6
3-5	MAIN BOARD	992 6407 001	3-12
3-6	OUTPUT AMP	992 6728 001	3-19
3-7	PHONE SELECT	992 6177 001	3-20
3-8	METER INTERFACE	992 6418 001	3-20
3-9	MONITOR SELECT	992 6181 001	3-20
3-10	ASSIGNMENT-2 CH	992 6171 001	3-21
3-11	MIC PREAMP	992 6185 001	3-21
3-12	POWER SUPPLY/MUTING	992 6479 001	3-22
3-13	POWER SUPPLY/MUTING BAORD	992 6259 001	3-23
3-14	KIT, INSTALLATION	992 6276 001	3-24
3-15	MODULE, ATTEN, LINEAR (P&G)	994 8762 001	3-25
3-16	MODULE, ATTEN, ROTARY (P&G)	994 8763 001	3-25
3-17	MODULE, ATTEN, ALT ROTARY (A&B)	994 8811 001	3-25
3-18	MODULE, ATTEN, ALT LINEAR (ALPS)	994 8812 001	3-25
3-19	POWER SUPPLY	992 6425 001	3-26
3-20	MODULE, BLANK	994 8826 001	3-27
3-21	MIC PREAMP OPTION	994 8775 001	3-27
3-11	MIC PREAMP	992 6185 001	3-21

Table 3-2. MEDALIST-12 Console, 12 Channel - 994 8835 001

Ref. Symbol	HARRIS Part No.	Description	Qty.
	994 8835 002	MEDALIST-12 CONSOLE, 12 CHANNEL	1
	992 6425 001	POWER SUPPLY	1

Table 3-3 MEDALIST-12 Console, 12 Channel - 994 8835 002

Ref. Symbol	HARRIS Part No.	Description	Qty.
A001	992 6165 001	INPUT SELECT, 4 CH	1.0
A003	992 6407 001	MAIN BOARD, 12 CH	1.0
A004	992 6728 001	OUTPUT AMP	1.0
A005	992 6177 001	PHONE SELECT	1.0
A006	992 6418 001	METER INTERFACE BD	1.0
A007	992 6181 001	MONITOR SELECT	1.0
A008	992 6171 001	ASSIGNMENT-2 CH	1.0
A009	992 6185 001	MIC PREAMP	1.0
J001	612 0824 000	JACK, PHONE N112B	1.0
	054 0014 021	CB BOX	1
	250 0382 000	CABLE ASSY 3" 12 POS MTA	3
	250 0384 000	CABLE ASSY, RIBBON 10 POS	12
	250 0385 000	CABLE ASSY 16 COND RIBBON	2
	250 0389 000	CABLE ASSY 26 COND RIBBON	1
	250 0390 000	CABLE ASSY 26 COND RIBBON	1
	250 0391 000	CABLE ASSY 26 COND RIBBON	1
	250 0392 000	CABLE ASSY 26 COND RIBBON	2
	250 0393 000	CABLE ASSY 26 COND RIBBON	3
	250 0394 000	CABLE ASSY 26 COND RIBBON	1
	250 0395 000	CABLE ASSY 10 COND RIBBON	1
	250 0396 000	CABLE ASSY 16 COND RIBBON	3
	358 2654 000	STUFFER CAP, WIRE	25
	358 2706 000	PLUG, INSUL, 1" DIA BLK	3
	358 2728 000	INSULATING COVER TO-3	2
	358 2753 000	PLUG BLACK .75 SQ HOLE	12
	410 0232 000	INSULATOR, MICA	2
	516 0375 000	CAP .01UF 50V	1
	604 0852 000	SWITCH, ROCKER DIP 4-SPST	4
	604 1039 000	RMT START SW, MOM ACTION	0
	604 1040 000	RMT START SW, ALT ACTION	0
	630 0183 000	VU METER, CUSTOM 3.5"	5
	646 1078 000	NAMEPLATE, HARRIS	1
#A005,#A007	650 0289 000	KNOB, BLACK	3
	722 0111 000	SPEAKER, 8 OHM 10 WATT	1
	817 0493 001	CLIP FLAT	4
	817 0494 001	CLIP RIGHT ANGLE	2
	817 1350 019	PLATE, JACK	1
	817 1350 021	FINGERSTOCK, L/R	4
	817 1350 023	STRAP, ALIGN	4
	817 1350 027	CHANNEL, GLIDE	2
	817 1350 030	PLATE, FILLER	2
	829 9198 068	ROD, CONSOLE	1
	829 9198 069	HINGE, CONSOLE	1
	839 6377 045	SUPT, PC BD LH	1
	839 6377 047	SUPT, PC BD RH	1
	839 6377 056	SUPT, PHONE SEL	1

Table 3-3 Medalist-12 Console, 12 Channel - 994 8835 002 (continued)

Ref. Symbol	Harris Part No.	Description	Qty.
	839 6377 057	SUPT, MON SEL	1
	839 6377 058	SUPT, PC BD (CTR)	1
	839 6377 059	SUPT, PWB	1
	839 6377 060	COVER, CONSOLE	1
	843 4128 024	PANEL, A/P	1
	852 8998 011	BASE, CONSOLE 12 CH	1
	852 8998 012	TOP, CONSOLE 12 CH	1
	917 1350 022	CABLE, GRN	1
	929 9198 056	CABLE ASSY	12
	929 9198 057	CABLE ASSY, PWR SUP	1
	929 9198 061	BUS, GRN	2
	929 9198 070	CABLE, 12 COND, 38" LG	1
	929 9198 074	CORD, PANEL STOP	1
	929 9198 083	COVER, LEXAN 4 CHAN	3
	939 6377 050	MOD, END BELL (LH)	1
	939 6377 051	MOD, END BELL (RH)	1
	943 4128 022	STIFFENER, TOP	1
	943 4128 023	CONSOLE, SUPT	1
	992 6276 001	KIT, INSTALLATION	1
	992 6479 001	POWER SUPPLY/MUTING	1

Table 3-4. Input Select Board 992 6165 002

Ref. Symbol	Harris Part No.	Description	Qty.
C001-C012	516 0777 000	CAP 100PF 50V 10%	12
C013-C016	516 0782 000	CAP 270PF 50V 10%	4
C017-C020	516 0773 000	CAP 47PF 50V 10%	4
C021,C022	522 0524 000	CAP 10 UF 25V 20%	2
C023	516 0771 000	CAP 33PF 50V 10%	1
C024	516 0453 000	CAP .1UF 100V 20%	1
C025	522 0524 000	CAP 10 UF 25V 20%	1
C026	516 0771 000	CAP 33PF 50V 10%	1
C027	516 0453 000	CAP .1UF 100V 20%	1
C028	516 0777 000	CAP 100PF 50V 10%	1
C033-C040	522 0524 000	CAP 10 UF 25V 20%	8
C042-C047	516 0453 000	CAP .1UF 100V 20%	6
C049-C058	516 0453 000	CAP .1UF 100V 20%	10
C101-C112	516 0777 000	CAP 100PF 50V 10%	12
C113-C116	516 0782 000	CAP 270PF 50V 10%	4
C117-C120	516 0773 000	CAP 47PF 50V 10%	4
C121,C122	522 0524 000	CAP 10 UF 25V 20%	2
C123	516 0771 000	CAP 33PF 50V 10%	1
C124	516 0453 000	CAP .1UF 100V 20%	1
C125	522 0524 000	CAP 10 UF 25V 20%	1
C126	516 0771 000	CAP 33PF 50V 10%	1
C127,C142-C147	516 0453 000	CAP .1UF 100V 20%	7
C150-C154,C156	516 0453 000	CAP .1UF 100V 20%	6
C201-C212	516 0777 000	CAP 100PF 50V 10%	12
C213-C216	516 0782 000	CAP 270PF 50V 10%	4
C217-C220	516 0773 000	CAP 47PF 50V 10%	4
C221,C222	522 0524 000	CAP 10 UF 25V 20%	2
C223	516 0771 000	CAP 33PF 50V 10%	1
C224	516 0453 000	CAP .1UF 100V 20%	1
C225	522 0524 000	CAP 10 UF 25V 20%	1
C226	516 0771 000	CAP 33PF 50V 10%	1
C227	516 0453 000	CAP .1UF 100V 20%	1
C228	516 0777 000	CAP 100PF 50V 10%	1
C242-C247	516 0453 000	CAP .1UF 100V 20%	6
C249-C256	516 0453 000	CAP .1UF 100V 20%	8
C301-C312	516 0777 000	CAP 100PF 50V 10%	12
C313-C316	516 0782 000	CAP 270PF 50V 10%	4
C317-C320	516 0773 000	CAP 47PF 50V 10%	4
C321,C322	522 0524 000	CAP 10 UF 25V 20%	2
C323	516 0771 000	CAP 33PF 50V 10%	1
C324	516 0453 000	CAP .1UF 100V 20%	1
C325	522 0524 000	CAP 10 UF 25V 20%	1
C326	516 0771 000	CAP 33PF 50V 10%	1
C327,C342-C347	516 0453 000	CAP .1UF 100V 20%	7
C350-C354,C356	516 0453 000	CAP .1UF 100V 20%	6
CR001-CR006	384 0205 000	DIODE SILICON 1N914	6
CR101-CR106	384 0205 000	DIODE SILICON 1N914	6
CR201-CR206	384 0205 000	DIODE SILICON 1N914	6

Table 3-4. Input Select Board - 992 6165 002 (continued)

Ref. Symbol	HARRIS Part No.	Description	Qty.
CR301-CR306	384 0205 000	DIODE SILICON 1N914	6
E001-E048	354 0718 000	TERMINAL, BARREL	48
J001	404 0673 000	SOCKET, IC 8 CONT	1
J002	404 0675 000	SOCKET, IC 16 CONT	1
J101	404 0673 000	SOCKET, IC 8 CONT	1
J102	404 0675 000	SOCKET, IC 16 CONT	1
J201	404 0673 000	SOCKET, IC 8 CONT	1
J202	404 0675 000	SOCKET, IC 16 CONT	1
J203,J301	404 0673 000	SOCKET, IC 8 CONT	2
J302	404 0675 000	SOCKET, IC 16 CONT	1
J303	404 0673 000	SOCKET, IC 8 CONT	1
P001	610 0902 000	HEADER 10 POS DUAL	1
P002	610 0747 000	HEADER ASSY 26 PIN	1
P003,P004	610 0903 000	HEADER 12 POS .100 CTR	2
P101,P201	610 0902 000	HEADER 10 POS DUAL	2
P202	610 0747 000	HEADER ASSY 26 PIN	1
P301	610 0902 000	HEADER 10 POS DUAL	1
Q001	380 0654 000	TRANSISTOR J112	1
Q101	380 0654 000	TRANSISTOR J112	1
Q201	380 0654 000	TRANSISTOR J112	1
Q301	380 0654 000	TRANSISTOR J112	1
R001-R012	548 1160 000	RES 4320 OHM 1/4W 1%	12
R013-R018	548 1537 000	RES 4220 OHM 1/4W 1%	6
R019-R024	540 0912 000	RES .25W 1000 OHM 5%	6
R025-R028	548 1124 000	RES 2210 OHM 1/4W 1%	4
R029	548 1211 000	RES 1100 OHM 1/4W 1%	1
R030	548 1094 000	RES 1000 OHM 1/4W 1%	1
R031,R032	548 1211 000	RES 1100 OHM 1/4W 1%	2
R033	548 1094 000	RES 1000 OHM 1/4W 1%	1
R034	548 1211 000	RES 1100 OHM 1/4W 1%	1
R035	548 1121 000	RES 10K OHM 1/4W 1%	1
R036	548 1144 000	RES 5620 OHM 1/4W 1%	1
R037,R038	548 1121 000	RES 10K OHM 1/4W 1%	2
R039	548 1144 000	RES 5620 OHM 1/4W 1%	1
R040	548 1121 000	RES 10K OHM 1/4W 1%	1
R041,R042	548 1144 000	RES 5620 OHM 1/4W 1%	2
R043	550 0961 000	POT 50K OHM 1/2W 10%	1
R044	540 0960 000	RES .25W 100K OHM 5%	1
R045	548 1139 000	RES 20K OHM 1/4W 1%	1
R046	540 0881 000	RES .25W 51 OHM 5%	1
R047	550 0961 000	POT 50K OHM 1/2W 10%	1
R048	540 0960 000	RES .25W 100K OHM 5%	1
R049	548 1139 000	RES 20K OHM 1/4W 1%	1
R050	540 0881 000	RES .25W 51 OHM 5%	1
R051,R052	548 1126 000	RES 4020 OHM 1/4W 1%	2
R053	548 1139 000	RES 20K OHM 1/4W 1%	1
R054	540 0880 000	RES .25W 47 OHM 5%	1
R055	548 1124 000	RES 2210 OHM 1/4W 1%	1

Table 3-4. Input Select Board - 992 6165 002 (continued)

Ref. Symbol	HARRIS Part No.	Description	Qty.
R056	548 1239 000	RES 124K OHM 1/4W 1%	1
R057	548 2077 000	RES 1050 OHM 1/4W 1%	1
R058	548 1333 000	RES 16.9K OHM 1/4W 1%	1
R059	548 1139 000	RES 20K OHM 1/4W 1%	1
R060	540 0880 000	RES .25W 47 OHM 5%	1
R061	548 1333 000	RES 16.9K OHM 1/4W 1%	1
R062	548 1144 000	RES 5620 OHM 1/4W 1%	1
R063	548 2080 000	RES 8660 OHM 1/4W 1%	1
R064	548 1139 000	RES 20K OHM 1/4W 1%	1
R065	540 0976 000	RES .25W 470K OHM 5%	1
R066-R071	540 0924 000	RES .25W 3300 OHM 5%	6
R072	540 0930 000	RES .25W 5600 OHM 5%	1
R073	540 0880 000	RES .25W 47 OHM 5%	1
R080,R081,R082	540 0948 000	RES .25W 33K OHM 5%	3
R83-R90	540 1465 000	RES .5W 47 OHM 5%	8
R091,R092	540 0888 000	RES .25W 100 OHM 5%	2
R093,R094	540 0960 000	RES .25W 100K OHM 5%	2
R101-R112	548 1160 000	RES 4320 OHM 1/4W 1%	12
R113-R118	548 1537 000	RES 4220 OHM 1/4W 1%	6
R119-R124	540 0912 000	RES .25W 1000 OHM 5%	6
R125-R128	548 1124 000	RES 2210 OHM 1/4W 1%	4
R129	548 1211 000	RES 1100 OHM 1/4W 1%	1
R130	548 1094 000	RES 1000 OHM 1/4W 1%	1
R131,R132	548 1211 000	RES 1100 OHM 1/4W 1%	2
R133	548 1094 000	RES 1000 OHM 1/4W 1%	1
R134	548 1211 000	RES 1100 OHM 1/4W 1%	1
R135	548 1121 000	RES 10K OHM 1/4W 1%	1
R136	548 1144 000	RES 5620 OHM 1/4W 1%	1
R137,R138	548 1121 000	RES 10K OHM 1/4W 1%	2
R139	548 1144 000	RES 5620 OHM 1/4W 1%	1
R140	548 1121 000	RES 10K OHM 1/4W 1%	1
R141,R142	548 1144 000	RES 5620 OHM 1/4W 1%	2
R143	550 0961 000	POT 50K OHM 1/2W 10%	1
R144	540 0960 000	RES .25W 100K OHM 5%	1
R145	548 1139 000	RES 20K OHM 1/4W 1%	1
R146	540 0881 000	RES .25W 51 OHM 5%	1
R147	550 0961 000	POT 50K OHM 1/2W 10%	1
R148	540 0960 000	RES .25W 100K OHM 5%	1
R149	548 1139 000	RES 20K OHM 1/4W 1%	1
R150	540 0881 000	RES .25W 51 OHM 5%	1
R151,R152	548 1126 000	RES 4020 OHM 1/4W 1%	2
R153	548 1139 000	RES 20K OHM 1/4W 1%	1
R154	540 0880 000	RES .25W 47 OHM 5%	1
R155	548 1124 000	RES 2210 OHM 1/4W 1%	1
R156	548 1239 000	RES 124K OHM 1/4W 1%	1
R157	548 2077 000	RES 1050 OHM 1/4W 1%	1
R158	548 1333 000	RES 16.9K OHM 1/4W 1%	1
R159	548 1139 000	RES 20K OHM 1/4W 1%	1

Table 3-4. Input Select Board - 992 6165 002 (continued)

Ref. Symbol	HARRIS Part No.	Description	Qty.
R160	540 0880 000	RES .25W 47 OHM 5%	1
R161	548 1333 000	RES 16.9K OHM 1/4W 1%	1
R162	548 1144 000	RES 5620 OHM 1/4W 1%	1
R163	548 2080 000	RES 8660 OHM 1/4W 1%	1
R164	548 1139 000	RES 20K OHM 1/4W 1%	1
R165	540 0976 000	RES .25W 470K OHM 5%	1
R193,R194	540 0960 000	RES .25W 100K OHM 5%	2
R201-R212	548 1160 000	RES 4320 OHM 1/4W 1%	12
R213-R218	548 1537 000	RES 4220 OHM 1/4W 1%	6
R219-R224	540 0912 000	RES .25W 1000 OHM 5%	6
R225-R228	548 1124 000	RES 2210 OHM 1/4W 1%	4
R229	548 1211 000	RES 1100 OHM 1/4W 1%	1
R230	548 1094 000	RES 1000 OHM 1/4W 1%	1
R231,R232	548 1211 000	RES 1100 OHM 1/4W 1%	2
R233	548 1094 000	RES 1000 OHM 1/4W 1%	1
R234	548 1211 000	RES 1100 OHM 1/4W 1%	1
R235	548 1121 000	RES 10K OHM 1/4W 1%	1
R236	548 1144 000	RES 5620 OHM 1/4W 1%	1
R237,R238	548 1121 000	RES 10K OHM 1/4W 1%	2
R239	548 1144 000	RES 5620 OHM 1/4W 1%	1
R240	548 1121 000	RES 10K OHM 1/4W 1%	1
R241,R242	548 1144 000	RES 5620 OHM 1/4W 1%	2
R243	550 0961 000	POT 50K OHM 1/2W 10%	1
R244	540 0960 000	RES .25W 100K OHM 5%	1
R245	548 1139 000	RES 20K OHM 1/4W 1%	1
R246	540 0881 000	RES .25W 51 OHM 5%	1
R247	550 0961 000	POT 50K OHM 1/2W 10%	1
R248	540 0960 000	RES .25W 100K OHM 5%	1
R249	548 1139 000	RES 20K OHM 1/4W 1%	1
R250	540 0881 000	RES .25W 51 OHM 5%	1
R251,R252	548 1126 000	RES 4020 OHM 1/4W 1%	2
R253	548 1139 000	RES 20K OHM 1/4W 1%	1
R254	540 0880 000	RES .25W 47 OHM 5%	1
R255	548 1124 000	RES 2210 OHM 1/4W 1%	1
R256	548 1239 000	RES 124K OHM 1/4W 1%	1
R257	548 2077 000	RES 1050 OHM 1/4W 1%	1
R258	548 1333 000	RES 16.9K OHM 1/4W 1%	1
R259	548 1139 000	RES 20K OHM 1/4W 1%	1
R260	540 0880 000	RES .25W 47 OHM 5%	1
R261	548 1333 000	RES 16.9K OHM 1/4W 1%	1
R262	548 1144 000	RES 5620 OHM 1/4W 1%	1
R263	548 2080 000	RES 8660 OHM 1/4W 1%	1
R264	548 1139 000	RES 20K OHM 1/4W 1%	1
R265	540 0976 000	RES .25W 470K OHM 5%	1
R266-R271	540 0924 000	RES .25W 3300 OHM 5%	6
R272	540 0930 000	RES .25W 5600 OHM 5%	1
R273	540 0880 000	RES .25W 47 OHM 5%	1
R280,R281,R282	540 0948 000	RES .25W 33K OHM 5%	3

Table 3-4. Input Select Board - 992 6165 002 (continued)

Ref. Symbol	HARRIS Part No.	Description	Qty.
R283-R286	540 0919 000	RES .25W 2000 OHM 5%	4
R291,R292	540 0888 000	RES .25W 100 OHM 5%	2
R293,R294	540 0960 000	RES .25W 100K OHM 5%	2
R301-R312	548 1160 000	RES 4320 OHM 1/4W 1%	12
R313-R318	548 1537 000	RES 4220 OHM 1/4W 1%	6
R319-R324	540 0912 000	RES .25W 1000 OHM 5%	6
R325-R328	548 1124 000	RES 2210 OHM 1/4W 1%	4
R329	548 1211 000	RES 1100 OHM 1/4W 1%	1
R330	548 1094 000	RES 1000 OHM 1/4W 1%	1
R331,R332	548 1211 000	RES 1100 OHM 1/4W 1%	2
R333	548 1094 000	RES 1000 OHM 1/4W 1%	1
R334	548 1211 000	RES 1100 OHM 1/4W 1%	1
R335	548 1121 000	RES 10K OHM 1/4W 1%	1
R336	548 1144 000	RES 5620 OHM 1/4W 1%	1
R337,R338	548 1121 000	RES 10K OHM 1/4W 1%	2
R339	548 1144 000	RES 5620 OHM 1/4W 1%	1
R340	548 1121 000	RES 10K OHM 1/4W 1%	1
R341,R342	548 1144 000	RES 5620 OHM 1/4W 1%	2
R343	550 0961 000	POT 50K OHM 1/2W 10%	1
R344	540 0960 000	RES .25W 100K OHM 5%	1
R345	548 1139 000	RES 20K OHM 1/4W 1%	1
R346	540 0881 000	RES .25W 51 OHM 5%	1
R347	550 0961 000	POT 50K OHM 1/2W 10%	1
R348	540 0960 000	RES .25W 100K OHM 5%	1
R349	548 1139 000	RES 20K OHM 1/4W 1%	1
R350	540 0881 000	RES .25W 51 OHM 5%	1
R351,R352	548 1126 000	RES 4020 OHM 1/4W 1%	2
R353	548 1139 000	RES 20K OHM 1/4W 1%	1
R354	540 0880 000	RES .25W 47 OHM 5%	1
R355	548 1124 000	RES 2210 OHM 1/4W 1%	1
R356	548 1239 000	RES 124K OHM 1/4W 1%	1
R357	548 2077 000	RES 1050 OHM 1/4W 1%	1
R358	548 1333 000	RES 16.9K OHM 1/4W 1%	1
R359	548 1139 000	RES 20K OHM 1/4W 1%	1
R360	540 0880 000	RES .25W 47 OHM 5%	1
R361	548 1333 000	RES 16.9K OHM 1/4W 1%	1
R362	548 1144 000	RES 5620 OHM 1/4W 1%	1
R363	548 2080 000	RES 8660 OHM 1/4W 1%	1
R364	548 1139 000	RES 20K OHM 1/4W 1%	1
R365	540 0976 000	RES .25W 470K OHM 5%	1
R366-R369	540 0919 000	RES .25W 2000 OHM 5%	4
R393,R394	540 0960 000	RES .25W 100K OHM 5%	2
S001,S101	604 1049 000	SW, PB 3 POS INTLK	2
S201,S301	604 1048 000	SW PB 3 POS INTLK	2
U001-U004	382 0767 000	IC NE5532	4
U005,U006	382 0881 000	IC 2150A	2
U007	382 0608 000	IC TL072CP3	1
U008	382 0636 000	IC TL071CP3	1

Table 3-4. Input Select Board 992 6165 002 (continued)

Ref. Symbol	Harris Part No.	Description	Qty.
U009	382 0184 000	IC 340T-5/7805 +5V REG	1
U101-U104	382 0767 000	IC NE5532	4
U105,U106	382 0881 000	IC 2150A	2
U107	382 0608 000	IC TL072CP3	1
U201-U204	382 0767 000	IC NE5532	4
U205,U206	382 0881 000	IC 2150A	2
U207	382 0608 000	IC TL072CP3	1
U208	382 0636 000	IC TL071CP3	1
U301-U304	382 0767 000	IC NE5532	4
U305,U306	382 0881 000	IC 2150A	2
U307	382 0608 000	IC TL072CP3	1
XU001-XU004	404 0673 000	SOCKET, IC 8 CONT	4
XU007,XU008	404 0673 000	SOCKET, IC 8 CONT	2
XU101-XU104	404 0673 000	SOCKET, IC 8 CONT	4
XU107	404 0673 000	SOCKET, IC 8 CONT	1
XU201-XU204	404 0673 000	SOCKET, IC 8 CONT	4
XU207,XU208	404 0673 000	SOCKET, IC 8 CONT	2
XU301-XU304	404 0673 000	SOCKET, IC 8 CONT	4
XU307	404 0673 000	SOCKET, IC 8 CONT	1
	598 0426 000	BUTTON, LIGHT GRAY	24
	852 8998 015	PWB, INPUT SELECT	1

Table 3-5. Main Board, 12 Channel - 992 6407 001

Ref. Symbol	Harris Part No.	Description	Qty.
C001-C048	522 0549 000	CAP 22UF 25V NON-POL	48.0
C049-C078	516 0453 000	CAP .1UF 100V 20%	32.0
C081,C082	516 0773 000	CAP 47PF 50V 10%	2.0
C083,C084	516 0453 000	CAP .1UF 100V 20%	2.0
C085,C086	516 0773 000	CAP 47PF 50V 10%	2.0
C087,C088	516 0453 000	CAP .1UF 100V 20%	2.0
C089	516 0777 000	CAP 100PF 50V 10%	1.0
C090	516 0453 000	CAP .1UF 100V 20%	1.0
C091,C092	522 0524 000	CAP 10 UF 25V 20%	2.0
C093,C094	516 0777 000	CAP 100PF 50V 10%	2.0
C095	516 0773 000	CAP 47PF 50V 10%	1.0
C096	516 0453 000	CAP .1UF 100V 20%	1.0
C097	516 0773 000	CAP 47PF 50V 10%	1.0
C098,C099	516 0777 000	CAP 100PF 50V 10%	2.0
C100	516 0773 000	CAP 47PF 50V 10%	1.0
C101	516 0453 000	CAP .1UF 100V 20%	1.0
C102	516 0773 000	CAP 47PF 50V 10%	1.0
C103,C104	516 0777 000	CAP 100PF 50V 10%	2.0
C105,C106	516 0773 000	CAP 47PF 50V 10%	2.0
C107	516 0453 000	CAP .1UF 100V 20%	1.0
C108,C109	516 0777 000	CAP 100PF 50V 10%	2.0
C110,C111	516 0773 000	CAP 47PF 50V 10%	2.0
C112	516 0453 000	CAP .1UF 100V 20%	1.0
C113,C114	516 0777 000	CAP 100PF 50V 10%	2.0
C115,C116	516 0773 000	CAP 47PF 50V 10%	2.0
C117	516 0453 000	CAP .1UF 100V 20%	1.0
C118	516 0773 000	CAP 47PF 50V 10%	1.0
C119	516 0453 000	CAP .1UF 100V 20%	1.0
C120	516 0773 000	CAP 47PF 50V 10%	1.0
C121	516 0453 000	CAP .1UF 100V 20%	1.0
C122	516 0773 000	CAP 47PF 50V 10%	1.0
C123,C124	516 0453 000	CAP .1UF 100V 20%	2.0
C125,C126	516 0773 000	CAP 47PF 50V 10%	2.0
C127,C128	516 0453 000	CAP .1UF 100V 20%	2.0
C129	516 0773 000	CAP 47PF 50V 10%	1.0
C130,C131	516 0453 000	CAP .1UF 100V 20%	2.0
C132	526 0050 000	CAP 1 UF 35V 20%	1.0
C133	516 0453 000	CAP .1UF 100V 20%	1.0
C134	526 0050 000	CAP 1 UF 35V 20%	1.0
C135	516 0453 000	CAP .1UF 100V 20%	1.0
E001-E032	354 0718 000	TERMINAL, BARREL	22.0
J001-J003	404 0675 000	SOCKET, IC 16 CONT	3.0
P001-P009	610 0747 000	HEADER ASSY 26 PIN	9.0
P010	610 0903 000	HEADER 12 POS .100 CTR	1.0
P011	610 0902 000	HEADER 10 POS DUAL	1.0

Table 3-5. Main Board, 12 Channel - 992 6407 001 (continued)

Ref. Symbol	Harris Part No.	Description	Qty.
R001	548 1120 000	RES 2000 OHM 1/4W 1%	1.0
R002	540 0952 000	RES 47.0K OHM 1/4W 5%	1.0
R003	548 1120 000	RES 2000 OHM 1/4W 1%	1.0
R004	540 0952 000	RES 47.0K OHM 1/4W 5%	1.0
R005	548 1120 000	RES 2000 OHM 1/4W 1%	1.0
R006	540 0952 000	RES 47.0K OHM 1/4W 5%	1.0
R007	548 1120 000	RES 2000 OHM 1/4W 1%	1.0
R008	540 0952 000	RES 47.0K OHM 1/4W 5%	1.0
R009	548 1120 000	RES 2000 OHM 1/4W 1%	1.0
R010	540 0952 000	RES 47.0K OHM 1/4W 5%	1.0
R011	548 1120 000	RES 2000 OHM 1/4W 1%	1.0
R012	540 0952 000	RES 47.0K OHM 1/4W 5%	1.0
R013	548 1120 000	RES 2000 OHM 1/4W 1%	1.0
R014	540 0952 000	RES 47.0K OHM 1/4W 5%	1.0
R015	548 1120 000	RES 2000 OHM 1/4W 1%	1.0
R016	540 0952 000	RES 47.0K OHM 1/4W 5%	1.0
R017	548 1120 000	RES 2000 OHM 1/4W 1%	1.0
R018	540 0952 000	RES 47.0K OHM 1/4W 5%	1.0
R019	548 1120 000	RES 2000 OHM 1/4W 1%	1.0
R020	540 0952 000	RES 47.0K OHM 1/4W 5%	1.0
R021	548 1120 000	RES 2000 OHM 1/4W 1%	1.0
R022	540 0952 000	RES 47.0K OHM 1/4W 5%	1.0
R023	548 1120 000	RES 2000 OHM 1/4W 1%	1.0
R024	540 0952 000	RES 47.0K OHM 1/4W 5%	1.0
R025	548 1120 000	RES 2000 OHM 1/4W 1%	1.0
R026	540 0952 000	RES 47.0K OHM 1/4W 5%	1.0
R027	548 1120 000	RES 2000 OHM 1/4W 1%	1.0
R028	540 0952 000	RES 47.0K OHM 1/4W 5%	1.0
R029	548 1120 000	RES 2000 OHM 1/4W 1%	1.0
R030	540 0952 000	RES 47.0K OHM 1/4W 5%	1.0
R031	548 1120 000	RES 2000 OHM 1/4W 1%	1.0
R032	540 0952 000	RES 47.0K OHM 1/4W 5%	1.0
R033	548 1120 000	RES 2000 OHM 1/4W 1%	1.0
R034	540 0952 000	RES 47.0K OHM 1/4W 5%	1.0
R035	548 1120 000	RES 2000 OHM 1/4W 1%	1.0
R036	540 0952 000	RES 47.0K OHM 1/4W 5%	1.0
R037	548 1120 000	RES 2000 OHM 1/4W 1%	1.0
R038	540 0952 000	RES 47.0K OHM 1/4W 5%	1.0
R039	548 1120 000	RES 2000 OHM 1/4W 1%	1.0
R040	540 0952 000	RES 47.0K OHM 1/4W 5%	1.0
R041	548 1120 000	RES 2000 OHM 1/4W 1%	1.0
R042	540 0952 000	RES 47.0K OHM 1/4W 5%	1.0
R043	548 1120 000	RES 2000 OHM 1/4W 1%	1.0
R044	540 0952 000	RES 47.0K OHM 1/4W 5%	1.0
R045	548 1120 000	RES 2000 OHM 1/4W 1%	1.0
R046	540 0952 000	RES 47.0K OHM 1/4W 5%	1.0
R047	548 1120 000	RES 2000 OHM 1/4W 1%	1.0
R048	540 0952 000	RES 47.0K OHM 1/4W 5%	1.0

Table 3-5. Main Board, 12 Channel - 992 6407 001 (continued)

Ref. Symbol	Harris Part No.	Description	Qty.
R049	548 1120 000	RES 2000 OHM 1/4W 1%	1.0
R050	540 0952 000	RES 47.0K OHM 1/4W 5%	1.0
R051	548 1120 000	RES 2000 OHM 1/4W 1%	1.0
R052	540 0952 000	RES 47.0K OHM 1/4W 5%	1.0
R053	548 1120 000	RES 2000 OHM 1/4W 1%	1.0
R054	540 0952 000	RES 47.0K OHM 1/4W 5%	1.0
R055	548 1120 000	RES 2000 OHM 1/4W 1%	1.0
R056	540 0952 000	RES 47.0K OHM 1/4W 5%	1.0
R057	548 1120 000	RES 2000 OHM 1/4W 1%	1.0
R058	540 0952 000	RES 47.0K OHM 1/4W 5%	1.0
R059	548 1120 000	RES 2000 OHM 1/4W 1%	1.0
R060	540 0952 000	RES 47.0K OHM 1/4W 5%	1.0
R061	548 1120 000	RES 2000 OHM 1/4W 1%	1.0
R062	540 0952 000	RES 47.0K OHM 1/4W 5%	1.0
R063	548 1120 000	RES 2000 OHM 1/4W 1%	1.0
R064	540 0952 000	RES 47.0K OHM 1/4W 5%	1.0
R065	548 1120 000	RES 2000 OHM 1/4W 1%	1.0
R066	540 0952 000	RES 47.0K OHM 1/4W 5%	1.0
R067	548 1120 000	RES 2000 OHM 1/4W 1%	1.0
R068	540 0952 000	RES 47.0K OHM 1/4W 5%	1.0
R069	548 1120 000	RES 2000 OHM 1/4W 1%	1.0
R070	540 0952 000	RES 47.0K OHM 1/4W 5%	1.0
R071	548 1120 000	RES 2000 OHM 1/4W 1%	1.0
R072	540 0952 000	RES 47.0K OHM 1/4W 5%	1.0
R073	548 1120 000	RES 2000 OHM 1/4W 1%	1.0
R074	540 0952 000	RES 47.0K OHM 1/4W 5%	1.0
R075	548 1120 000	RES 2000 OHM 1/4W 1%	1.0
R076	540 0952 000	RES 47.0K OHM 1/4W 5%	1.0
R077	548 1120 000	RES 2000 OHM 1/4W 1%	1.0
R078	540 0952 000	RES 47.0K OHM 1/4W 5%	1.0
R079	548 1120 000	RES 2000 OHM 1/4W 1%	1.0
R080	540 0952 000	RES 47.0K OHM 1/4W 5%	1.0
R081	548 1120 000	RES 2000 OHM 1/4W 1%	1.0
R082	540 0952 000	RES 47.0K OHM 1/4W 5%	1.0
R083	548 1120 000	RES 2000 OHM 1/4W 1%	1.0
R084	540 0952 000	RES 47.0K OHM 1/4W 5%	1.0
R085	548 1120 000	RES 2000 OHM 1/4W 1%	1.0
R086	540 0952 000	RES 47.0K OHM 1/4W 5%	1.0
R087	548 1120 000	RES 2000 OHM 1/4W 1%	1.0
R088	540 0952 000	RES 47.0K OHM 1/4W 5%	1.0
R089	548 1120 000	RES 2000 OHM 1/4W 1%	1.0
R090	540 0952 000	RES 47.0K OHM 1/4W 5%	1.0
R091	548 1120 000	RES 2000 OHM 1/4W 1%	1.0
R092	540 0952 000	RES 47.0K OHM 1/4W 5%	1.0
R093	548 1120 000	RES 2000 OHM 1/4W 1%	1.0
R094	540 0952 000	RES 47.0K OHM 1/4W 5%	1.0
R095	548 1120 000	RES 2000 OHM 1/4W 1%	1.0
R096	540 0952 000	RES 47.0K OHM 1/4W 5%	1.0

Table 3-5. Main Board, 12 Channel - 992 6407 001 (continued)

Ref. Symbol	Harris Part No.	Description	Qty.
R097-R104	540 1440 000	RES NETWORK 2000 OHM 2%	8.0
R105	540 0936 000	RES 10.0K OHM 1/4W 5%	1.0
R106	540 0952 000	RES 47.0K OHM 1/4W 5%	1.0
R107	540 0936 000	RES 10.0K OHM 1/4W 5%	1.0
R108	540 0952 000	RES 47.0K OHM 1/4W 5%	1.0
R109	540 0936 000	RES 10.0K OHM 1/4W 5%	1.0
R110	540 0952 000	RES 47.0K OHM 1/4W 5%	1.0
R111	540 0936 000	RES 10.0K OHM 1/4W 5%	1.0
R112	540 0952 000	RES 47.0K OHM 1/4W 5%	1.0
R113	540 0936 000	RES 10.0K OHM 1/4W 5%	1.0
R114	540 0952 000	RES 47.0K OHM 1/4W 5%	1.0
R115	540 0936 000	RES 10.0K OHM 1/4W 5%	1.0
R116	540 0952 000	RES 47.0K OHM 1/4W 5%	1.0
R117	540 0936 000	RES 10.0K OHM 1/4W 5%	1.0
R118	540 0952 000	RES 47.0K OHM 1/4W 5%	1.0
R119	540 0936 000	RES 10.0K OHM 1/4W 5%	1.0
R120	540 0952 000	RES 47.0K OHM 1/4W 5%	1.0
R121	540 0936 000	RES 10.0K OHM 1/4W 5%	1.0
R122	540 0952 000	RES 47.0K OHM 1/4W 5%	1.0
R123	540 0936 000	RES 10.0K OHM 1/4W 5%	1.0
R124	540 0952 000	RES 47.0K OHM 1/4W 5%	1.0
R125	540 0936 000	RES 10.0K OHM 1/4W 5%	1.0
R126	540 0952 000	RES 47.0K OHM 1/4W 5%	1.0
R127	540 0936 000	RES 10.0K OHM 1/4W 5%	1.0
R128	540 0952 000	RES 47.0K OHM 1/4W 5%	1.0
R129	540 0936 000	RES 10.0K OHM 1/4W 5%	1.0
R130	540 0952 000	RES 47.0K OHM 1/4W 5%	1.0
R131	540 0936 000	RES 10.0K OHM 1/4W 5%	1.0
R132	540 0952 000	RES 47.0K OHM 1/4W 5%	1.0
R133	540 0936 000	RES 10.0K OHM 1/4W 5%	1.0
R134	540 0952 000	RES 47.0K OHM 1/4W 5%	1.0
R135	540 0936 000	RES 10.0K OHM 1/4W 5%	1.0
R136	540 0952 000	RES 47.0K OHM 1/4W 5%	1.0
R137	540 0936 000	RES 10.0K OHM 1/4W 5%	1.0
R138	540 0952 000	RES 47.0K OHM 1/4W 5%	1.0
R139	540 0936 000	RES 10.0K OHM 1/4W 5%	1.0
R140	540 0952 000	RES 47.0K OHM 1/4W 5%	1.0
R141	540 0936 000	RES 10.0K OHM 1/4W 5%	1.0
R142	540 0952 000	RES 47.0K OHM 1/4W 5%	1.0
R143	540 0936 000	RES 10.0K OHM 1/4W 5%	1.0
R144	540 0952 000	RES 47.0K OHM 1/4W 5%	1.0
R145	540 0936 000	RES 10.0K OHM 1/4W 5%	1.0
R146	540 0952 000	RES 47.0K OHM 1/4W 5%	1.0
R147	540 0936 000	RES 10.0K OHM 1/4W 5%	1.0
R148	540 0952 000	RES 47.0K OHM 1/4W 5%	1.0
R149	540 0936 000	RES 10.0K OHM 1/4W 5%	1.0
R150	540 0952 000	RES 47.0K OHM 1/4W 5%	1.0
R151	540 0936 000	RES 10.0K OHM 1/4W 5%	1.0

Table 3-5. Main Board, 12 Channel - 992 6407 001 (continued)

Ref. Symbol	Harris Part No.	Description	Qty.
R152	540 0952 000	RES 47.0K OHM 1/4W 5%	1.0
R153	540 0936 000	RES 10.0K OHM 1/4W 5%	1.0
R154	540 0952 000	RES 47.0K OHM 1/4W 5%	1.0
R155	540 0936 000	RES 10.0K OHM 1/4W 5%	1.0
R156	540 0952 000	RES 47.0K OHM 1/4W 5%	1.0
R157	540 0936 000	RES 10.0K OHM 1/4W 5%	1.0
R158	540 0952 000	RES 47.0K OHM 1/4W 5%	1.0
R159	540 0936 000	RES 10.0K OHM 1/4W 5%	1.0
R160	540 0952 000	RES 47.0K OHM 1/4W 5%	1.0
R161	540 0936 000	RES 10.0K OHM 1/4W 5%	1.0
R162	540 0952 000	RES 47.0K OHM 1/4W 5%	1.0
R163	540 0936 000	RES 10.0K OHM 1/4W 5%	1.0
R164	540 0952 000	RES 47.0K OHM 1/4W 5%	1.0
R165	540 0936 000	RES 10.0K OHM 1/4W 5%	1.0
R166	540 0952 000	RES 47.0K OHM 1/4W 5%	1.0
R167	540 0936 000	RES 10.0K OHM 1/4W 5%	1.0
R168	540 0952 000	RES 47.0K OHM 1/4W 5%	1.0
R169	540 0936 000	RES 10.0K OHM 1/4W 5%	1.0
R170	540 0952 000	RES 47.0K OHM 1/4W 5%	1.0
R171	540 0936 000	RES 10.0K OHM 1/4W 5%	1.0
R172	540 0952 000	RES 47.0K OHM 1/4W 5%	1.0
R173	540 0936 000	RES 10.0K OHM 1/4W 5%	1.0
R174	540 0952 000	RES 47.0K OHM 1/4W 5%	1.0
R175	540 0936 000	RES 10.0K OHM 1/4W 5%	1.0
R176	540 0952 000	RES 47.0K OHM 1/4W 5%	1.0
R177	540 0936 000	RES 10.0K OHM 1/4W 5%	1.0
R178	540 0952 000	RES 47.0K OHM 1/4W 5%	1.0
R179	540 0936 000	RES 10.0K OHM 1/4W 5%	1.0
R180	540 0952 000	RES 47.0K OHM 1/4W 5%	1.0
R181	540 0936 000	RES 10.0K OHM 1/4W 5%	1.0
R182	540 0952 000	RES 47.0K OHM 1/4W 5%	1.0
R183	540 0936 000	RES 10.0K OHM 1/4W 5%	1.0
R184	540 0952 000	RES 47.0K OHM 1/4W 5%	1.0
R185	540 0936 000	RES 10.0K OHM 1/4W 5%	1.0
R186	540 0952 000	RES 47.0K OHM 1/4W 5%	1.0
R187	540 0936 000	RES 10.0K OHM 1/4W 5%	1.0
R188	540 0952 000	RES 47.0K OHM 1/4W 5%	1.0
R189	540 0936 000	RES 10.0K OHM 1/4W 5%	1.0
R190	540 0952 000	RES 47.0K OHM 1/4W 5%	1.0
R191	540 0936 000	RES 10.0K OHM 1/4W 5%	1.0
R192	540 0952 000	RES 47.0K OHM 1/4W 5%	1.0
R193	540 0936 000	RES 10.0K OHM 1/4W 5%	1.0
R194	540 0952 000	RES 47.0K OHM 1/4W 5%	1.0
R195	540 0936 000	RES 10.0K OHM 1/4W 5%	1.0
R196	540 0952 000	RES 47.0K OHM 1/4W 5%	1.0
R197	540 0936 000	RES 10.0K OHM 1/4W 5%	1.0
R198	540 0952 000	RES 47.0K OHM 1/4W 5%	1.0
R199	540 0936 000	RES 10.0K OHM 1/4W 5%	1.0

Table 3-5. Main Board, 12 Channel - 992 6407 001 (continued)

Ref. Symbol	Harris Part No.	Description	Qty.
R200	540 0952 000	RES 47.0K OHM 1/4W 5%	1.0
R201	548 1126 000	RES 4020 OHM 1/4W 1%	1.0
R202,R203	540 0919 000	RES 2.0K OHM 1/4W 5%	2.0
R204,R205	548 1126 000	RES 4020 OHM 1/4W 1%	2.0
R206,R207	540 0919 000	RES 2.0K OHM 1/4W 5%	2.0
R208	548 1126 000	RES 4020 OHM 1/4W 1%	1.0
R209	540 1440 000	RES NETWORK 2000 OHM 2%	1.0
R210	548 1120 000	RES 2000 OHM 1/4W 1%	1.0
R211	540 0912 000	RES 1.0K OHM 1/4W 5%	1.0
R212	540 0907 000	RES 620.0 OHM 1/4W 5%	1.0
R213,R214	548 1160 000	RES 4320 OHM 1/4W 1%	2.0
R215,R216	548 1099 000	RES 3650 OHM 1/4W 1%	2.0
R217,R218	548 1121 000	RES 10K OHM 1/4W 1%	2.0
R219,R220	548 1160 000	RES 4320 OHM 1/4W 1%	2.0
R221,R222	548 1094 000	RES 1000 OHM 1/4W 1%	2.0
R223,R224	548 1121 000	RES 10K OHM 1/4W 1%	2.0
R225,R226	548 1160 000	RES 4320 OHM 1/4W 1%	2.0
R227,R228	548 1094 000	RES 1000 OHM 1/4W 1%	2.0
R229,R230	548 1121 000	RES 10K OHM 1/4W 1%	2.0
R231,R232	548 1160 000	RES 4320 OHM 1/4W 1%	2.0
R233,R234	548 1094 000	RES 1000 OHM 1/4W 1%	2.0
R235,R236	548 1121 000	RES 10K OHM 1/4W 1%	2.0
R237,R238	548 1160 000	RES 4320 OHM 1/4W 1%	2.0
R239,R240	548 1094 000	RES 1000 OHM 1/4W 1%	2.0
R241,R242,R243	548 1121 000	RES 10K OHM 1/4W 1%	3.0
R244	548 1171 000	RES 3320 OHM 1/4W 1%	1.0
R245,R246	540 0960 000	RES 100.0K OHM 1/4W 5%	2.0
R247	548 1171 000	RES 3320 OHM 1/4W 1%	1.0
R248,R249	548 1121 000	RES 10K OHM 1/4W 1%	2.0
R250,R251	548 1140 000	RES 15K OHM 1/4W 1%	2.0
R252	548 2051 000	RESISTOR ZERO OHM	1.0
R253	548 1121 000	RES 10K OHM 1/4W 1%	1.0
R254	548 1171 000	RES 3320 OHM 1/4W 1%	1.0
R255	540 0912 000	RES 1.0K OHM 1/4W 5%	1.0
R256	540 0960 000	RES 100.0K OHM 1/4W 5%	1.0
R257	548 1121 000	RES 10K OHM 1/4W 1%	1.0
R258	548 1171 000	RES 3320 OHM 1/4W 1%	1.0
R259	540 0960 000	RES 100.0K OHM 1/4W 5%	1.0
R260	540 0912 000	RES 1.0K OHM 1/4W 5%	1.0
R261,R262	540 0880 000	RES 47.0 OHM 1/4W 5%	2.0
R263	548 1121 000	RES 10K OHM 1/4W 1%	1.0
R264	548 1171 000	RES 3320 OHM 1/4W 1%	1.0
R265	540 0960 000	RES 100.0K OHM 1/4W 5%	1.0
R266	540 0912 000	RES 1.0K OHM 1/4W 5%	1.0
U001-U015	382 0867 000	IC 4053BC	16.0
U017	382 0767 000	IC NE5532	1.0
U017	404 0673 000	SOCKET, IC 8 CONT	1.0
U018	382 0767 000	IC NE5532	1.0

Table 3-5. Main Board, 12 Channel - 992 6407 001 (continued)

Ref. Symbol	Harris Part No.	Description	Qty.
U018	404 0673 000	SOCKET, IC 8 CONT	1.0
U019	382 0767 000	IC NE5532	1.0
U019	404 0673 000	SOCKET, IC 8 CONT	1.0
U020	382 0767 000	IC NE5532	1.0
U020	404 0673 000	SOCKET, IC 8 CONT	1.0
U021	382 0767 000	IC NE5532	1.0
U021	404 0673 000	SOCKET, IC 8 CONT	1.0
U022	382 0767 000	IC NE5532	1.0
U022	404 0673 000	SOCKET, IC 8 CONT	1.0
U023	382 0636 000	IC TL071CP3	1.0
U023	404 0673 000	SOCKET, IC 8 CONT	1.0
U024	382 0767 000	IC NE5532	1.0
U024	404 0673 000	SOCKET, IC 8 CONT	1.0
U025	382 0636 000	IC TL071CP3	1.0
U025	404 0673 000	SOCKET, IC 8 CONT	1.0
U026	382 0273 000	IC LM340T-8/UA7808	1.0
U027	382 0385 000	IC 7908	1.0
XU01-XU16	404 0675 000	SOCKET, IC 16 CONT	16.0
	952 8998 010	ASSY MAIN BOARD PWB	1

Table 3-6. Output Amp Board - 992 6728 001

Ref. Symbol	HARRIS Part No.	Description	Qty.
C001-C004	516 0773 000	CAP 47PF 50V 10%	4
C005-C008	516 0375 000	CAP .01UF 50V	4
C009-C012	522 0524 000	CAP 10 UF 25V 20%	4
C013-C018	516 0453 000	CAP .1UF 100V 20%	6
C019-C022	516 0773 000	CAP 47PF 50V 10%	4
C023-C030	506 0234 000	CAP .0022UF 63V 5%	8
E001-E006	354 0718 000	TERMINAL, BARREL	6
J001	404 0675 000	SOCKET, IC 16 CONT	1
R001	550 0623 000	POT, 5K OHM .5W 10%	1
R002	540 0919 000	RES .25W 2000 OHM 5%	1
R003	540 0906 000	RES .25W 560 OHM 5%	1
R004	548 1534 000	RES 1430 OHM 1/4W 1%	1
R005	548 2049 000	RES 1270 OHM 1/4W 1%	1
R006	548 2048 000	RES 1130 OHM 1/4W 1%	1
R007	548 1167 000	RES 10.2K OHM 1/4W 1%	1
R008	540 0880 000	RES 47.0 OHM 1/4W 5%	1
R009	548 1121 000	RES 10K OHM 1/4W 1%	1
R010	540 0880 000	RES 47.0 OHM 1/4W 5%	1
R011,R012	548 2050 000	RES 15.8K OHM 1/4W 1%	2
R013,R014	548 1121 000	RES 10K OHM 1/4W 1%	2
R015	550 0623 000	POT, 5K OHM .5W 10%	1
R016	540 0919 000	RES .25W 2000 OHM 5%	1
R017	540 0906 000	RES .25W 560 OHM 5%	1
R018	548 1534 000	RES 1430 OHM 1/4W 1%	1
R019	548 2049 000	RES 1270 OHM 1/4W 1%	1
R020	548 2048 000	RES 1130 OHM 1/4W 1%	1
R021	548 1167 000	RES 10.2K OHM 1/4W 1%	1
R022	540 0880 000	RES 47.0 OHM 1/4W 5%	1
R023	548 1121 000	RES 10K OHM 1/4W 1%	1
R024	540 0880 000	RES 47.0 OHM 1/4W 5%	1
R025,R026	548 2050 000	RES 15.8K OHM 1/4W 1%	2
R027,R028	548 1121 000	RES 10K OHM 1/4W 1%	2
R029-R032	540 1478 000	RES 10.0 OHM 1/4W 5%	4
R033-R038	548 2051 000	RESISTOR ZERO OHM	6
R039-R041	540 0880 000	RES 47.0 OHM 1/4W 5%	3
R042	548 2051 000	RESISTOR ZERO OHM	1
R043-R045	540 0880 000	RES 47.0 OHM 1/4W 5%	3
U001	382 0767 000	IC NE5532	1
U002	382 0608 000	IC TL072CP3	1
U003	382 0767 000	IC NE5532	1
XU001-XU003	404 0673 000	SOCKET, IC 8 CONT	3
	839 6377 102	PWB OUTPUT AMP BD	1
	839 6377 104	SCHEM, OUTPUT AMP	0

Table 3-7. Phone Select Board - 992 6177 001

Ref. Symbol	HARRIS Part No.	Description	Qty.
C001-C002	522 0524 000	CAP 10 UF 25V 20%	2
P001	610 0747 000	HEADER ASSY 26 PIN	1
R001-R004	548 2051 000	RESISTOR ZERO OHM	4
R005	550 1029 000	POT, DUAL 5K 2W 10% AUDIO	1
S1	598 0423 000	BUTTON, BLACK	1
S001	604 0998 000	SW, PB 1 POS PUSH-PUSH	1
S002	604 1002 000	SW, PB 6 POS INTERLOCK	1
S002-1	598 0425 000	BUTTON, RED	1
S002-2	598 0424 000	BUTTON, BLUE	1
S2-3	598 0423 000	BUTTON, BLACK	1
S2-4,S2-5,S2-6	598 0426 000	BUTTON, LIGHT GRAY	3
	843 4128 001	PWB, PHONE SELECT	1

Table 3-8. Meter Interface Board - 992 6418 001

Ref. Symbol	HARRIS Part No.	Description	Qty.
E001-E020	354 0718 000	TERMINAL, BARREL	20
J001-J005	404 0674 000	SOCKET, IC 14 CONT	5
P001	610 0747 000	HEADER ASSY 26 PIN	1
R001-R005	548 1158 000	RES 3920 OHM 1/4W 1%	5
R006	548 1116 000	RES 2740 OHM 1/4W 1%	1
R007	548 2067 000	RES 5360 OHM 1/4W 1%	1
R008	548 1116 000	RES 2740 OHM 1/4W 1%	1
R009	548 2067 000	RES 5360 OHM 1/4W 1%	1
R010	548 1116 000	RES 2740 OHM 1/4W 1%	1
R011	548 2067 000	RES 5360 OHM 1/4W 1%	1
R012	548 1116 000	RES 2740 OHM 1/4W 1%	1
R013	548 2067 000	RES 5360 OHM 1/4W 1%	1
R014	548 1116 000	RES 2740 OHM 1/4W 1%	1
R015	548 2067 000	RES 5360 OHM 1/4W 1%	1
	839 6377 062	PWB METER INTERFACE	1

Table 3-9. Monitor Select Board - 992 6181 001

Ref. Symbol	HARRIS Part No.	Description	Qty.
C001	522 0524 000	CAP 10 UF 25V 20%	1
P001	610 0747 000	HEADER ASSY 26 PIN	1
R001	550 1053 000	POT 1K 2W 10% AUDIO TAPER	1
R002	550 1029 000	POT, DUAL 5K 2W 10% AUDIO	1
S001	604 1002 000	SW, PB 6 POS INTERLOCK	1
S001-1	598 0425 000	BUTTON, RED	1
S001-2	598 0424 000	BUTTON, BLUE	1
S001-3	598 0423 000	BUTTON, BLACK	1
S1-4,S1-5,S1-6	598 0426 000	BUTTON, LIGHT GRAY	3
	843 4128 002	PWB, MONITOR SELECT	1

Table 3-10. 2 Channel Assignment Board 992 6171 001

Ref. Symbol	Harris Part No.	Description	Qty.
P1	610 0902 000	HEADER 10 POS DUAL	1
P2	610 0901 000	HEADER 6 POS .156 CTR	1
P3	610 0902 000	HEADER 10 POS DUAL	1
P4	610 0901 000	HEADER 6 POS .156 CTR	1
S1,S2	604 0999 000	SW, PB 2 POS PUSH-PUSH	2
	598 0424 000	BUTTON, BLUE	10
	598 0425 000	BUTTON, RED	10
	839 6377 022	PWB ASSIGNMENT, 2 CH	5

Table 3-11. Mic Preamp Board 992 6185 001

Ref. Symbol	Harris Part No.	Description	Qty.
C001,C002	522 0549 000	CAP 22UF 25V NON-POL	2
C003	516 0453 000	CAP .1UF 100V 20%	1
C004	522 0524 000	CAP 10 UF 25V 20%	1
C005	516 0453 000	CAP .1UF 100V 20%	1
C006	522 0524 000	CAP 10 UF 25V 20%	1
C007	516 0719 000	CAP .0047UF 100V 20%	1
C008	526 0050 000	CAP 1 UF 35V 20%	1
C009	522 0524 000	CAP 10 UF 25V 20%	1
C010	526 0050 000	CAP 1 UF 35V 20%	1
C011,C012	516 0773 000	CAP 47PF 50V 10%	2
C013,C014	516 0769 000	CAP 22PF 50V 10%	2
C015-C018	516 0453 000	CAP .1UF 100V 20%	4
CR001,CR002	384 0205 000	DIODE SILICON 1N914	2
E001-E003	354 0718 000	TERMINAL, BARREL	3
Q001-Q006	380 0646 000	TRANSISTOR MPS4355	6
R001,R002	540 0960 000	RES .25W 100K OHM 5%	2
R003,R004	548 1147 000	RES 4750 OHM 1/4W 1%	2
R005	540 0896 000	RES .25W 220 OHM 5%	1
R006	540 0952 000	RES .25W 47K OHM 5%	1
R007	540 0920 000	RES .25W 2200 OHM 5%	1
R008	540 0924 000	RES .25W 3300 OHM 5%	1
R009	540 0896 000	RES .25W 220 OHM 5%	1
R010	540 0920 000	RES .25W 2200 OHM 5%	1
R011	540 0924 000	RES .25W 3300 OHM 5%	1
R012	548 1157 000	RES 3010 OHM 1/4W 1%	1
R013	540 0864 000	RES .25W 10 OHM 5%	1
R014	550 0812 000	POT 100 OHM 1/2W 10%	1
R015	548 1157 000	RES 3010 OHM 1/4W 1%	1
R016	540 0984 000	RES .25W 1.0M OHM 5%	1
R017	540 0976 000	RES .25W 470K OHM 5%	1
R018	540 0984 000	RES .25W 1.0M OHM 5%	1
R019,R020	548 1121 000	RES 10K OHM 1/4W 1%	2
R021	548 2079 000	RES 3160 OHM 1/4W 1%	1
R022	550 0623 000	POT, 5K OHM .5W 10%	1

Table 3-11. Mic Preamp Board 992 6185 001 (continued)

Ref. Symbol	Harris Part No.	Description	Qty.
R023	548 1144 000	RES 5620 OHM 1/4W 1%	1
R024,R025	548 2065 000	RES 3570 OHM 1/4W 1%	2
R026	550 0623 000	POT, 5K OHM .5W 10%	1
R027	548 1212 000	RES 7500 OHM 1/4W 1%	1
R028	548 2067 000	RES 5360 OHM 1/4W 1%	1
R029	548 1212 000	RES 7500 OHM 1/4W 1%	1
R030	548 2067 000	RES 5360 OHM 1/4W 1%	1
R031	540 0880 000	RES .25W 47 OHM 5PCT	1
R032	548 2051 000	RESISTOR ZERO OHM	1
R033	540 0960 000	RES .25W 100K OHM 5%	1
R034,R035	540 0864 000	RES .25W 10 OHM 5%	2
U001	382 0552 000	IC TL074CN3	1
U002	382 0767 000	IC NE5532	1
XJ1	404 0675 000	SOCKET, IC 16 CONT	1
XU001	404 0674 000	SOCKET, IC 14 CONT	1
XU002	404 0673 000	SOCKET, IC 8 CONT	1
	939 6377 020	ASSY, MIC PREAMP PWB	2

Table 3-12. Power Supply/Muting Board - 992 6479 001

Ref. Symbol	Harris Part No.	Description	Qty.
R005	542 1587 000	RESISTOR 10.0 OHM 5.25W 5%	1
C028,C029	516 0453 000	CAPACITOR .1UF 100V 20%	2
U1	382 0720 000	IC LM350K	1
U2	382 1049 000	IC LT1033CK	1
	992 6259 001	POWER SUPPLY/MUTING	1

NOTE

R005, U1 and U2 above are used to replace the same parts on Power Supply/Muting Board 992-6259-001 to create the Power Supply/Muting Board 992-6479-001.

Table 3-13. Power Supply/Muting Board - 992 6259 001

Ref. Symbol	HARRIS Part NO.	Description	Qty.
C1	516 0074 000	CAP, DISC .005UF 1KV 20%	1
C2,C3	522 0547 000	CAP 3300 UF 40V	2
C4	516 0074 000	CAP, DISC .005UF 1KV 20%	1
C5	522 0547 000	CAP 3300 UF 40V	1
C6,C8	522 0548 000	CAP 10UF 50V ELECTROLYTIC	1
C7	522 0550 000	CAP 100U 25V ELECTROLYTIC	1
C8	522 0548 000	CAP 10UF 50V ELECTROLYTIC	1
C9	522 0550 000	CAP 100U 25V ELECTROLYTIC	1
C10,C12,C13,C15	522 0524 000	CAP 10 UF 25V 20%	4
C16	526 0050 000	CAP 1 UF 35V 20%	1
C17	506 0230 000	CAP .001UF 63V 5%	1
C18	522 0524 000	CAP 10 UF 25V 20%	1
C19	506 0244 000	CAP .22UF 63V 5%	1
C20	522 0550 000	CAP 100UF 25V ELECTROLYTIC	1
C21,C22	506 0246 000	CAP .47UF 63V 5%	2
C23,C24	522 0550 000	CAP 100UF 25V ELECTROLYTIC	2
C25,C26	516 0453 000	CAP .1UF 100V 20%	2
C27	522 0550 000	CAP 100UF 25V ELECTROLYTIC	1
C30,C31	516 0777 000	CAP 100PF 50V 10%	2
CR1,CR2	384 0665 000	RECT, BRIDGE MDA-201	2
CR3-CR14	384 0357 000	RECT. 1N4004	12
E1-E7	354 0718 000	TERMINAL, BARREL	7
F1,F2,F3	398 0049 000	FUSE SLOW CART .500A 250V	3
J1	612 1129 000	SOCKET HEADER 6 POS PC MT	1
K1,K2,K3	574 0103 000	RELAY 24VDC 4PDT	3
P1	610 0902 000	HEADER 10 POS DUAL	1
P2,P3	610 0903 000	HEADER 12 POS .100 CTR	2
Q1,Q2,Q3	380 0126 000	TRANSISTOR 2N4403	3
R1	540 0890 000	RES 120.0 OHM 1/4W 5%	1
R2,R3	540 0916 000	RES 1.5K OHM 1/4W 5%	2
R4	540 0890 000	RES 120.0 OHM 1/4W 5%	1
R5	540 0571 000	RES 22.0 OHM 2W 5%	1
R6	540 0928 000	RES 4.7K OHM 1/4W 5%	1
R7	540 0960 000	RES 100.0K OHM 1/4W 5%	1
R8	540 0900 000	RES 330.0 OHM 1/4W 5%	1
R9	540 0960 000	RES 100.0K OHM 1/4W 5%	1
R10	540 0900 000	RES 330.0 OHM 1/4W 5%	1
R11	540 0960 000	RES 100.0K OHM 1/4W 5%	1
R12	540 0900 000	RES 330.0 OHM 1/4W 5%	1
R3	540 0924 000	RES 3.3K OHM 1/4W 5%	1
R14	540 0958 000	RES 82.0K OHM 1/4W 5%	1
R15	540 0957 000	RES 75.0K OHM 1/4W 5%	1
R16	540 0945 000	RES 24.0K OHM 1/4W 5%	1
R17	540 0924 000	RES 3.3K OHM 1/4W 5%	1
R18	540 0958 000	RES 82.0K OHM 1/4W 5%	1
R19	540 0957 000	RES 75.0K OHM 1/4W 5%	1
R20	540 0945 000	RES 24.0K OHM 1/4W 5%	1
R21	540 0917 000	RES 1.6K OHM 1/4W 5%	1
R22	540 0928 000	RES 4.7K OHM 1/4W 5%	1

Table 3-13. Power Supply/Muting Board - 992 6259 001 (continued)

Ref. Symbol	HARRIS Part NO.	Description	Qty.
R23	540 0952 000	RES 47.0K OHM 1/4W 5%	1
R24	540 0957 000	RES 75.0K OHM 1/4W 5%	1
R25	540 0945 000	RES 24.0K OHM 1/4W 5%	1
R26	540 0595 000	RES 220.0 OHM 2W 5%	1
R27	540 1101 000	RES 1.0 OHM 1/2W 5%	1
R28,R29	540 0595 000	RES 220.0 OHM 2W 5%	2
R30	540 1102 000	RES 100.0 OHM 1/2W 5%	1
TB1-TB4	614 0758 000	TERMINAL STRIP 8 POS	4
U1	382 0475 000	IC LM317K	1
U2	382 0874 000	IC LM337K	1
U3	382 0956 000	IC LM378N	1
U4	382 0730 000	IC TDA2030V	1
XK1-XK3	404 0161 000	SOCKET RELAY 9KH2	3
	943 4128 012	ASSY PWR SUP/MUTING PWB	1
	402 0129 000	CLIP FUSE	6
	404 0713 000	HEAT SINK, TO-220 CASE	1
	404 0661 000	SOCKET, TRANSISTOR	2

TABLE 3-14. INSTALLATION KIT 992 6276 001

Ref. Symbol	HARRIS Part NO.	Description	Qty.
	302 0106 000	SCR 6-32 X 3/8	20
	324 0033 000	NUT HEX KEP 6-32 STL	20
	336 1199 000	SCREW 6-32 X 3/8	100
	354 0147 000	LUG SHAKE .150 MTG	50
	358 2654 000	STUFFER CAP, WIRE	200
	396 0236 000	LAMP 28V OL-2185	3
	398 0049 000	FUSE SLOW CART .500A 250V	2
	398 0052 000	FUSE SLOW CART .750A 250V	2
	464 0199 000	SCREWDRIVER, PHILLIPS	1
	646 1333 000	LABEL, MULTI	1

Table 3-15. Attenuator Module, Linear 994 8762 001

Ref. Symbol	Harris Part No.	Description	Qty.
	354 0729 000	CONTACT, SOCKET 30-26 AWG	6
	550 1036 000	FADER, LINEAR 10K OHM (P&G)	1
	598 0427 000	BUTTON, STATUS INDICATOR	1
	604 0998 000	SW, PB 1 POS PUSH-PUSH	1
	610 0912 000	HOUSING, PLUG 6 CKT	1
	646 1331 000	OVERLAY, ATTEN-LINEAR	1
	929 9198 059	MOD, ATTEN PLATE	1

Table 3-16. Attenuator Module, Rotary 994 8763 001

Ref. Symbol	Harris Part No.	Description	Qty.
	354 0729 000	CONTACT, SOCKET 30-26 AWG	6
	554 0353 000	FADER, ROTARY 10K LINEAR (P&G)	1
	598 0427 000	BUTTON, STATUS INDICATOR	1
	604 0998 000	SW, PB 1 POS PUSH-PUSH	1
	610 0912 000	HOUSING, PLUG 6 CKT	1
	646 1332 000	OVERLAY, ATTEN-ROTARY	1
	650 0159 000	KNOB	1
	929 9198 059	MOD, ATTEN PLATE	1

Table 3-17. Attenuator Module, Alternate Rotary 994 8811 001

Ref. Symbol	Harris Part No.	Description	Qty.
	354 0729 000	CONTACT, SOCKET 30-26 AWG	6
	550 1051 000	POT 10K OHM TYPE EJA 10% (A-B)	1
	598 0427 000	BUTTON, STATUS INDICATOR	1
	604 0998 000	SW, PB 1 POS PUSH-PUSH	1
	610 0912 000	HOUSING, PLUG 6 CKT	1
	646 1332 000	OVERLAY, ATTEN-ROTARY	1
	650 0159 000	KNOB	1
	929 9198 059	MOD, ATTEN PLATE	1

Table 3-18. Attenuator Module, Alternate Linear 994 8812 001

Ref. Symbol	Harris Part No.	Description	Qty.
	554 0354 000	FADER, LINEAR 10K OHM (ALPS)	1
	598 0427 000	BUTTON, STATUS INDICATOR	1
	604 0998 000	SW, PB 1 POS PUSH-PUSH	1
	610 0912 000	HOUSING, PLUG 6 CKT	1
	646 1331 000	OVERLAY, ATTEN-LINEAR	1
	650 0300 000	KNOB, BLACK LOW PROFILE	1
	929 9198 059	MOD, ATTEN PLATE	1
	354 0729 000	CONTACT, SOCKET 30-26 AWG	6

Table 3-19. Power Supply, 12 Channel - 992 6425 001

Ref. Symbol	Harris Part No.	Description	Qty.
F1	398 0052 000	FUSE SLOW CART .750A 250V	1.0
	099 0001 285	SPLIT SCORE SHEET	1
	099 0001 286	EPS U-PAD	2
	099 0001 287	C.B. BOX	1
	250 0075 000	CORD 3C 18AWG 6FT LG	1
	354 0731 000	CONTACT, SOCKET 24-20 AWG	4
	354 0732 000	CONTACT, PIN 24-20 AWG	10
	358 0976 000	BUSHING, STRAIN RELI	1
	402 0023 000	FUSE HOLDER 342004	1
	472 1568 000	TRANSFORMER, POWER	1
	610 0942 000	HOUSING, PLUG 4 CKT	1
	612 1143 000	HOUSING, RECEPT 6 CKT	1
	612 1173 000	HOUSING, RECEPTACLE 4 CKT	1
	614 0149 000	TERM STRIP 5 CENTER	1
	646 1078 000	NAMEPLATE, HARRIS	1
	929 9198 041	CHASSIS ASSY, POWER SUP	1
	939 6377 048	COVER, POWER SUP.	1

Table 3-20. Blank Module 994 8826 001

Ref. Symbol	Harris Part No.	Description	Qty.
	646 1337 000	OVERLAY BLANK	1
	929 9198 059	MOD, ATTEN PLATE	1

Table 3-21. Mic Preamp Option 994 8875 001

Ref. Symbol	Harris Part No.	Description	Qty.
	250 0385 000	CABLE ASSY 16 COND RIBBON	1
	358 2654 000	STUFFER CAP, WIRE	3
	604 0852 000	SWITCH, ROCKER DIP 4-SPST	1
	992 6185 001	MIC PREAMP	1

SECTION IV

DIAGRAMS

INTRODUCTION

This section of the Technical Manual contains all of the schematics and logic diagrams for the MEDALIST-12 Console. The diagrams in this section are as follows:

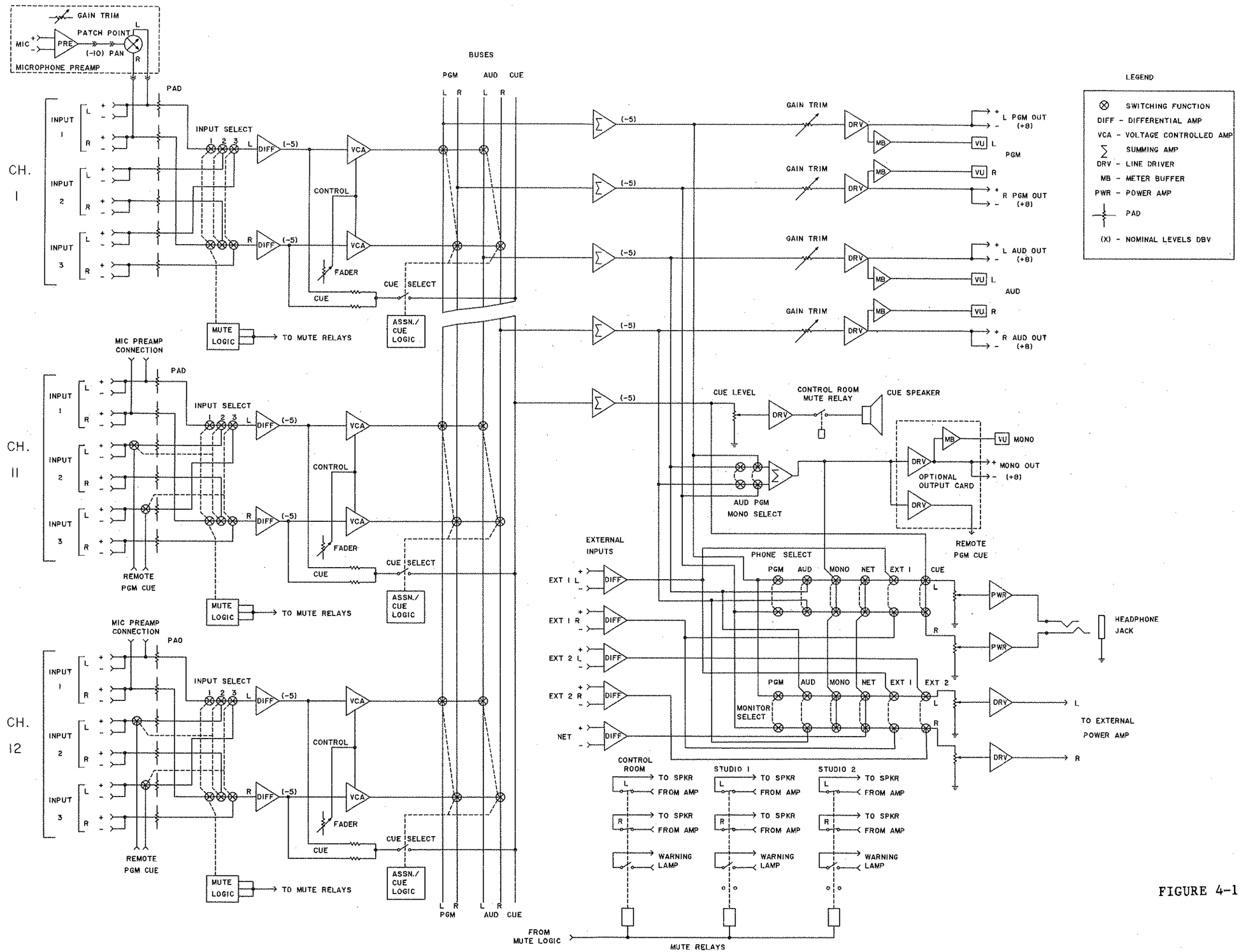

FIGURE 4-1 BLOCK DIAGRAM
MEDALIST-12
839 6377 068

888-6004-003
4-3/4-4

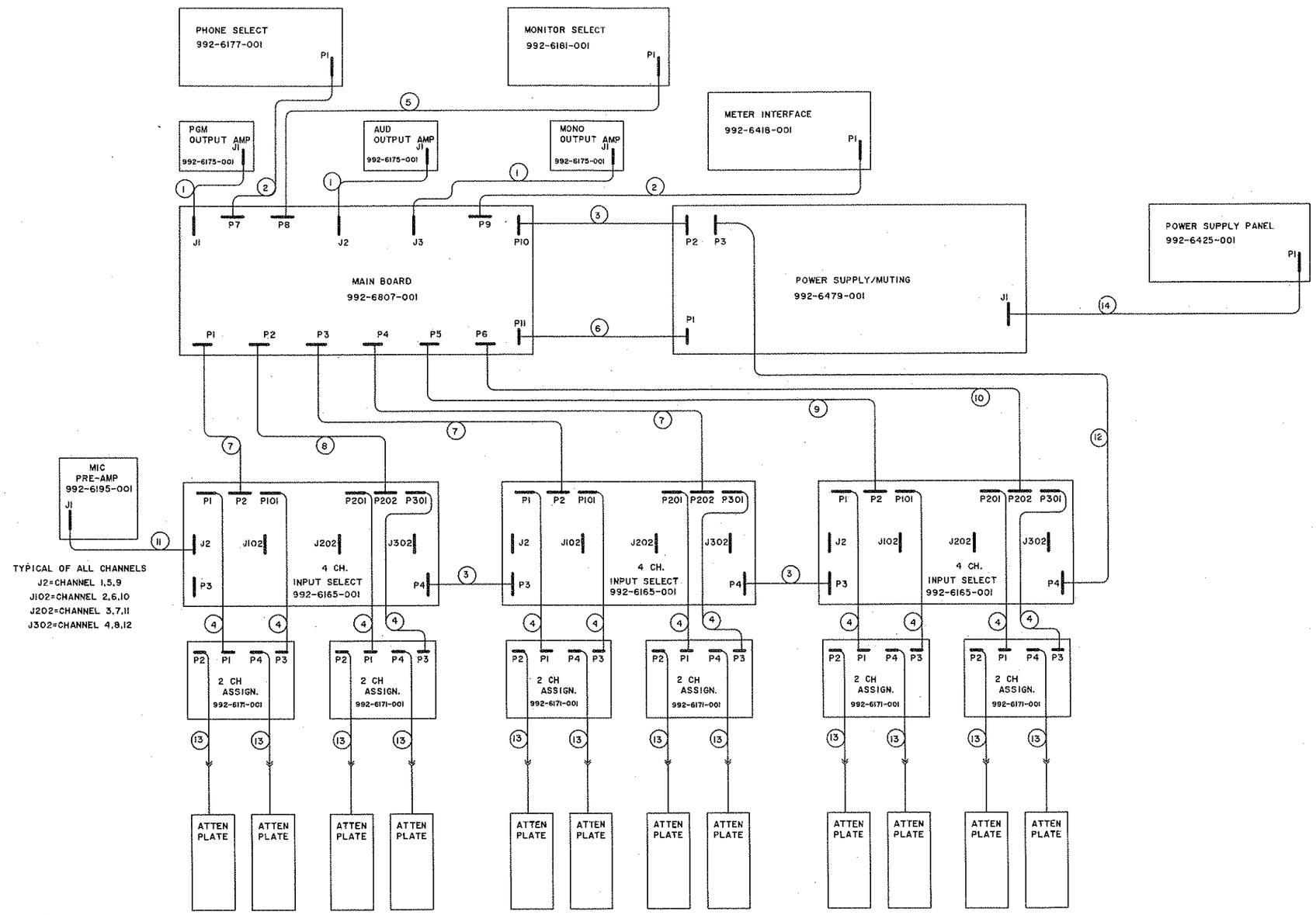

CABLE 1	HARRIS PN. 250-0415-000
CABLE 2	HARRIS PN. 250-0392-000
CABLE 3	HARRIS PN. 250-0382-000
CABLE 4	HARRIS PN. 250-0384-000
CABLE 5	HARRIS PN. 250-0413-000
CABLE 6	HARRIS PN. 250-0395-000
CABLE 7	HARRIS PN. 250-0393-000
CABLE 8	HARRIS PN. 250-0394-000
CABLE 9	HARRIS PN. 250-0391-000
CABLE 10	HARRIS PN. 250-0414-000
CABLE 11	HARRIS PN. 250-0385-000
CABLE 12	HARRIS PN. 929-9198-070
CABLE 13	HARRIS PN. 929-9198-056
CABLE 14	HARRIS PN. 929-9198-057

FIGURE 4-2 INTERWIRING DIAGRAM
MEDALIST-12
839 6377 076

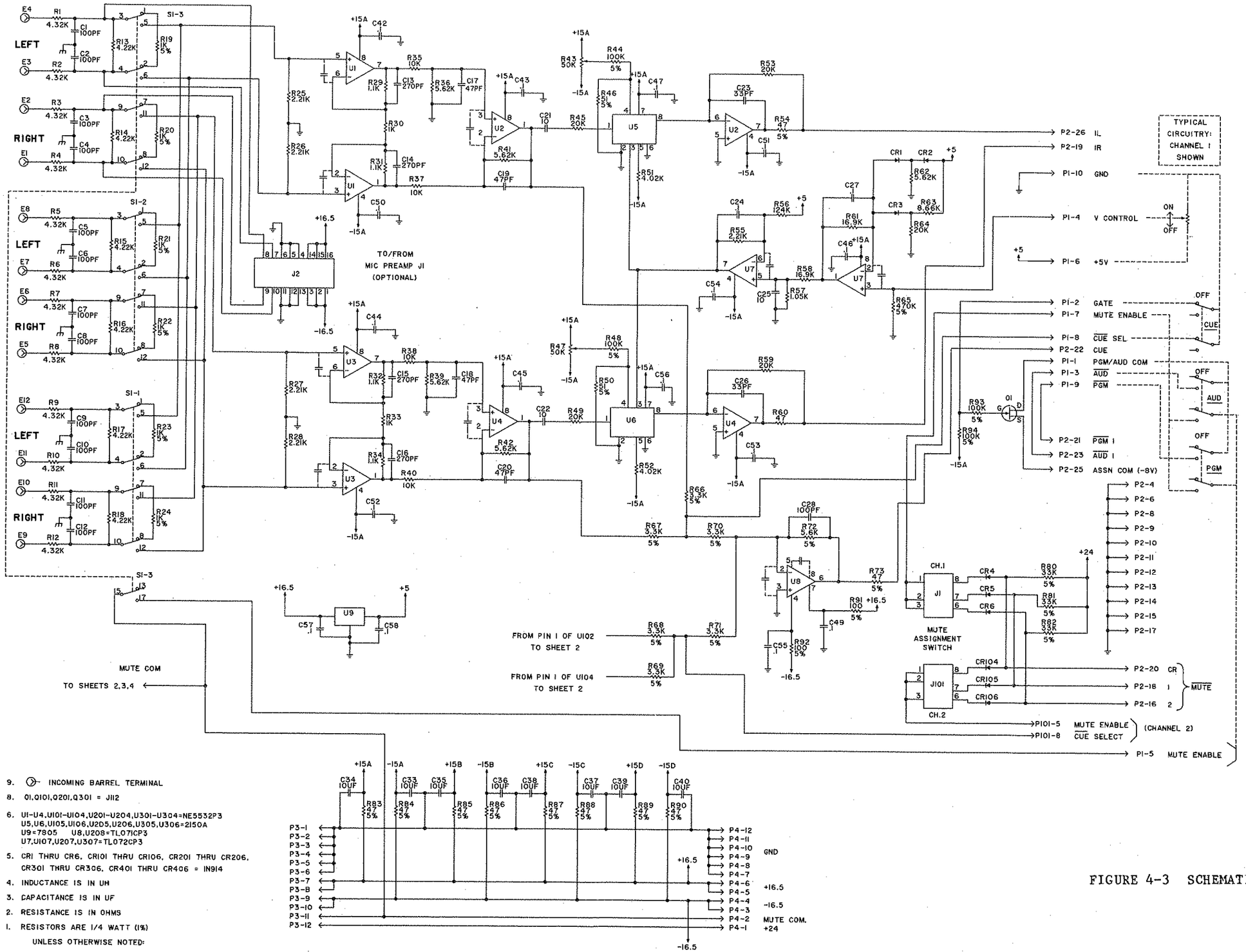

9. INCOMING BARREL TERMINAL
8. Q1,Q101,Q201,Q301 = J112
6. U1-U4,U101-U104,U201-U204,U301-U304=NE5532P3
   U5,U6,U105,U106,U205,U206,U305,U306=2150A
   U9=7805 U8,U208=TL071CP3
   U7,U107,U207,U307=TL072CP3
5. CR1 THRU CR6, CR101 THRU CR106, CR201 THRU CR206, CR301 THRU CR306, CR401 THRU CR406 = IN914
4. INDUCTANCE IS IN UH
3. CAPACITANCE IS IN UF
2. RESISTANCE IS IN OHMS
1. RESISTORS ARE 1/4 WATT (1%)
   UNLESS OTHERWISE NOTED:

FIGURE 4-3 SCHEMATIC, INPUT SELECT
(SHEET 1 OF 4)
839 6377 005

888-6004-003
4-7/4-8

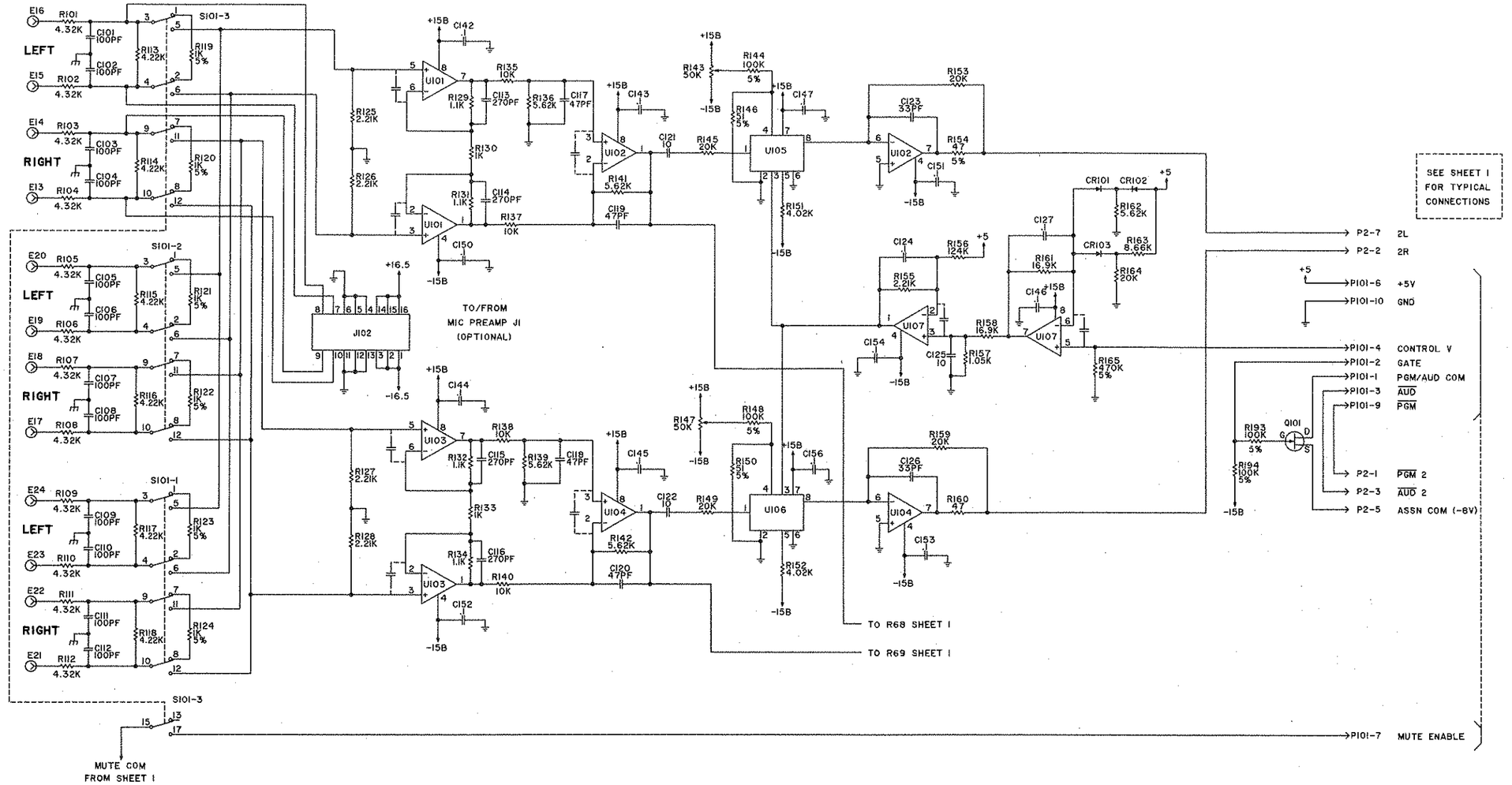

FIGURE 4-3 SCHEMATIC, INPUT SELECT
(SHEET 2 OF 4)
839 6377 005

888-6004-003
4-9/4-10

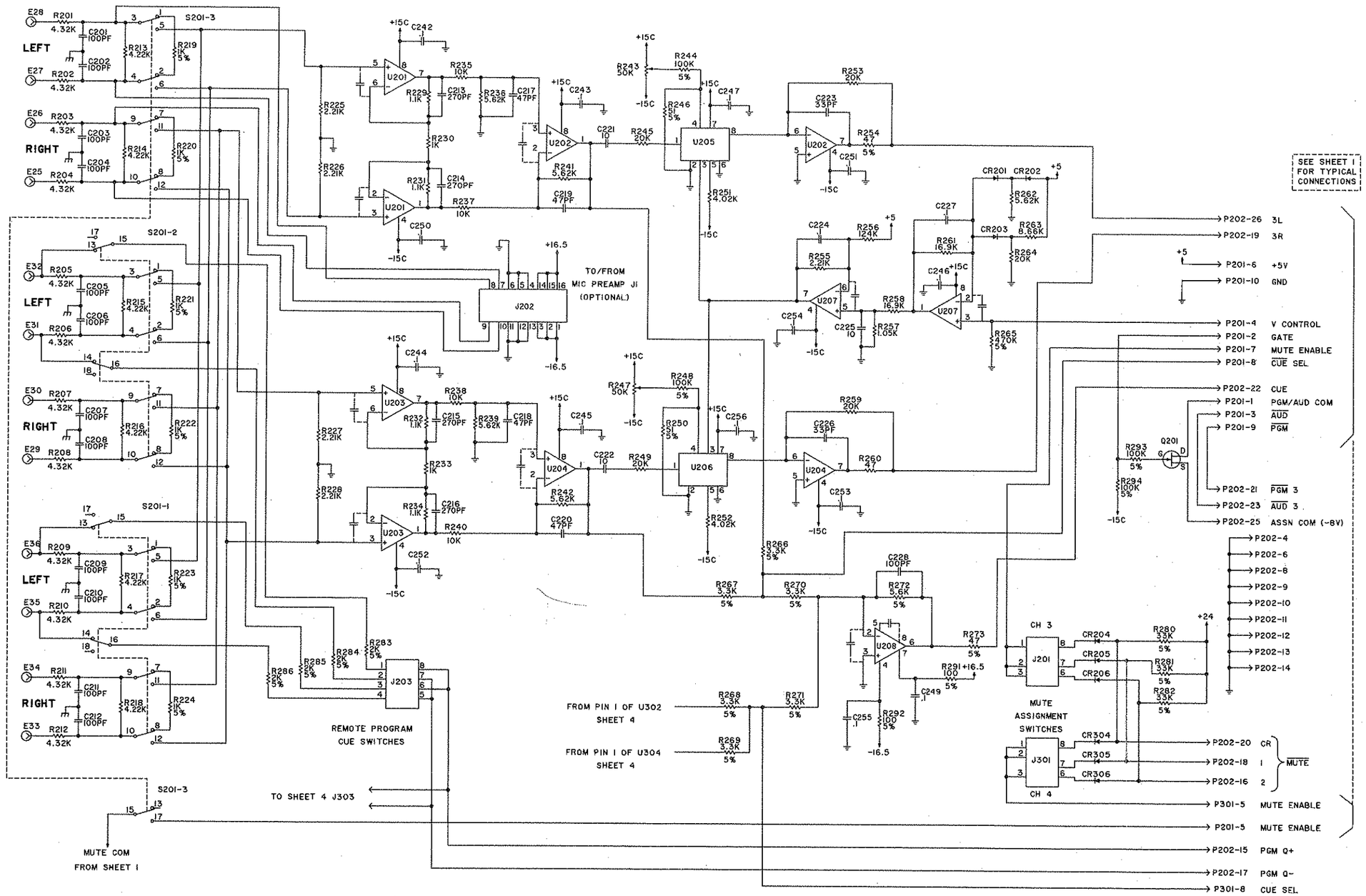

FIGURE 4-3 SCHEMATIC, INPUT SELECT
(SHEET 3 OF 4)
839 6377 005

888-6004-003
4-11/4-12

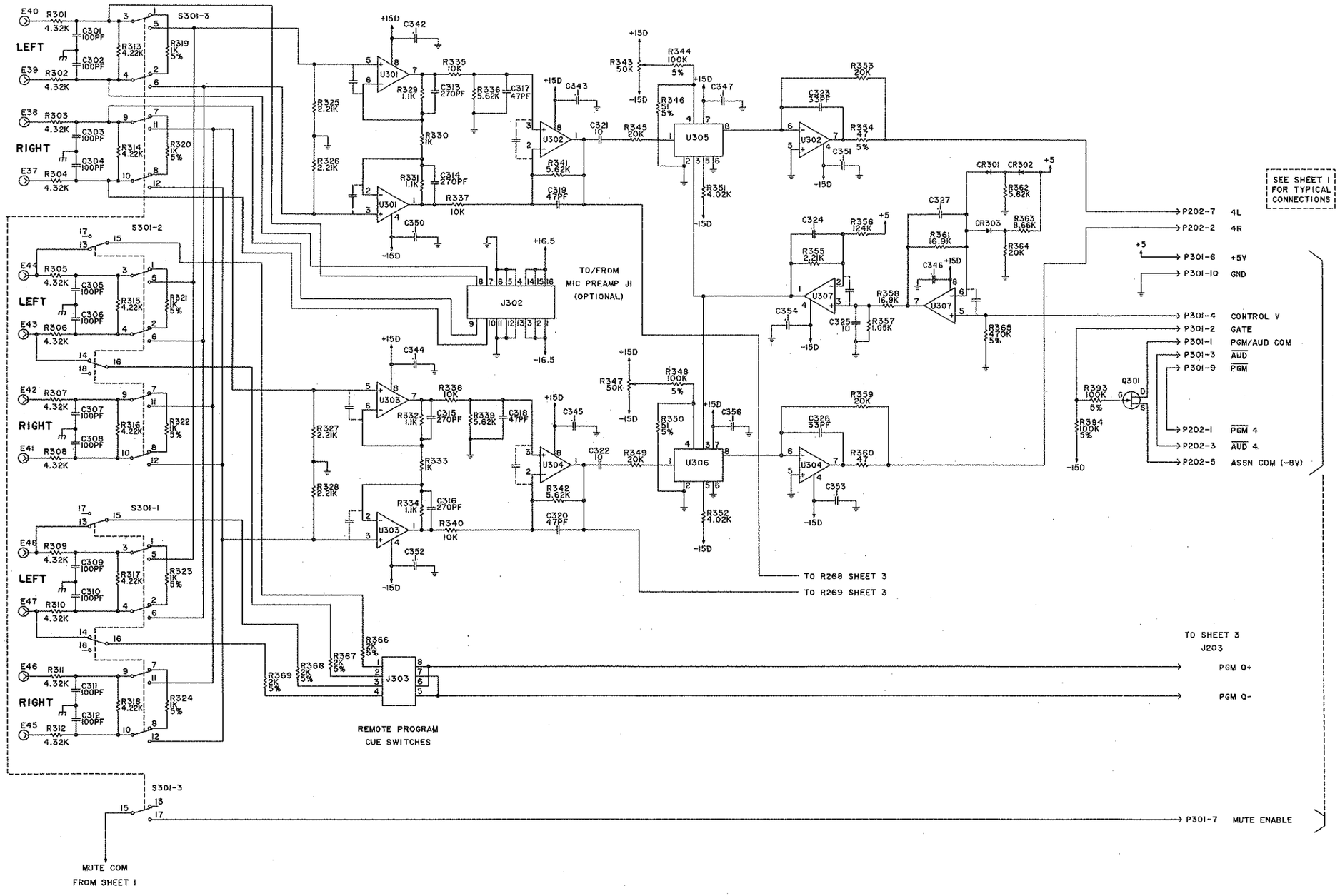

FIGURE 4-3 SCHEMATIC, INPUT SELECT
(SHEET 4 OF 4)
839 6377 005

888-6004-003
4-13/4-14

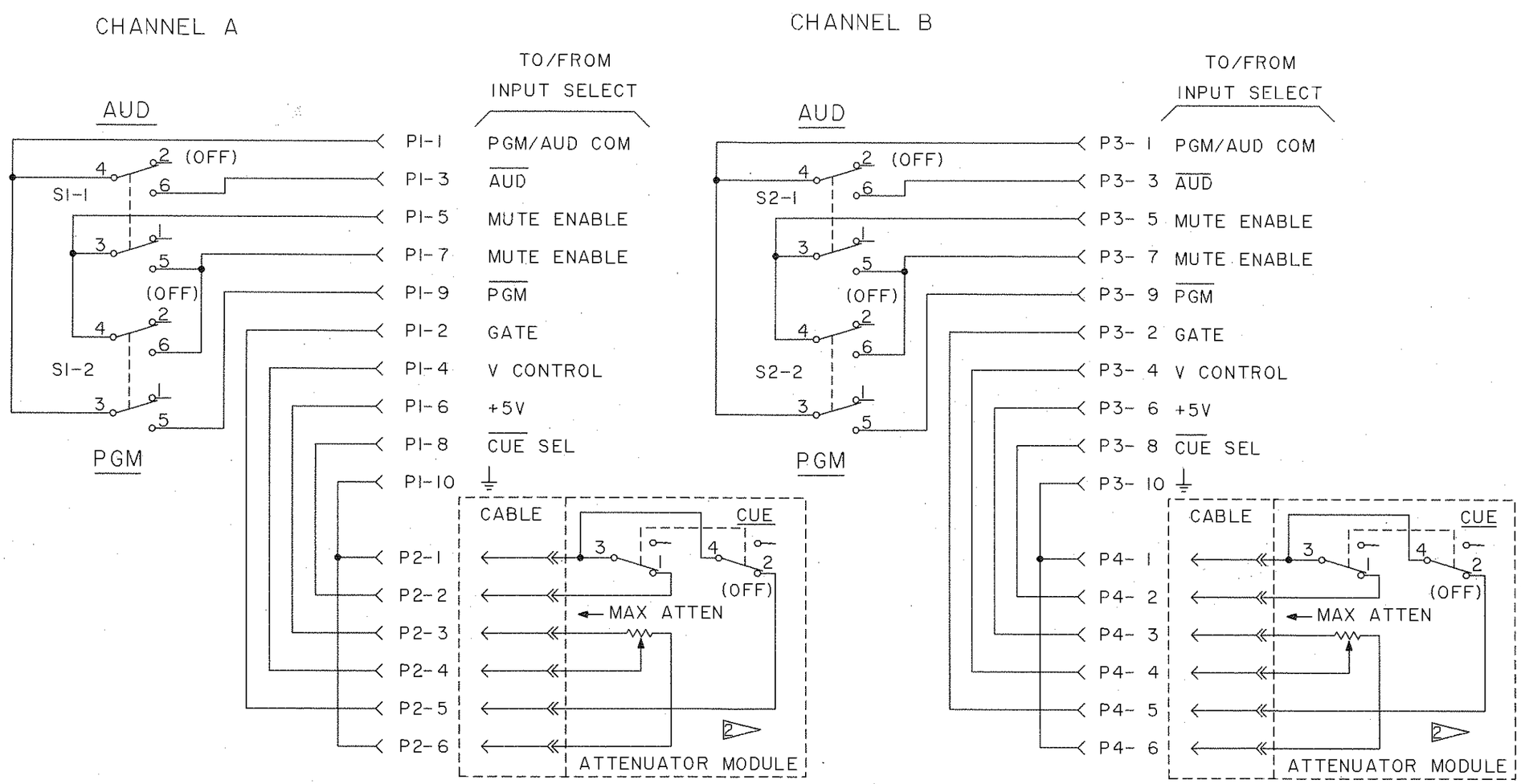

2 CIRCUITRY WITHIN DASHED LINES FOR REFERENCE - NOT PART OF THIS BOARD.

1. ALL SWITCHES SHOWN IN OFF POSITION.

FIGURE 4-4 SCHEMATIC
2 CHANNEL ASSIGNMENT
839 6377 008

888-6004-003
4-15/4-16

Rev.A

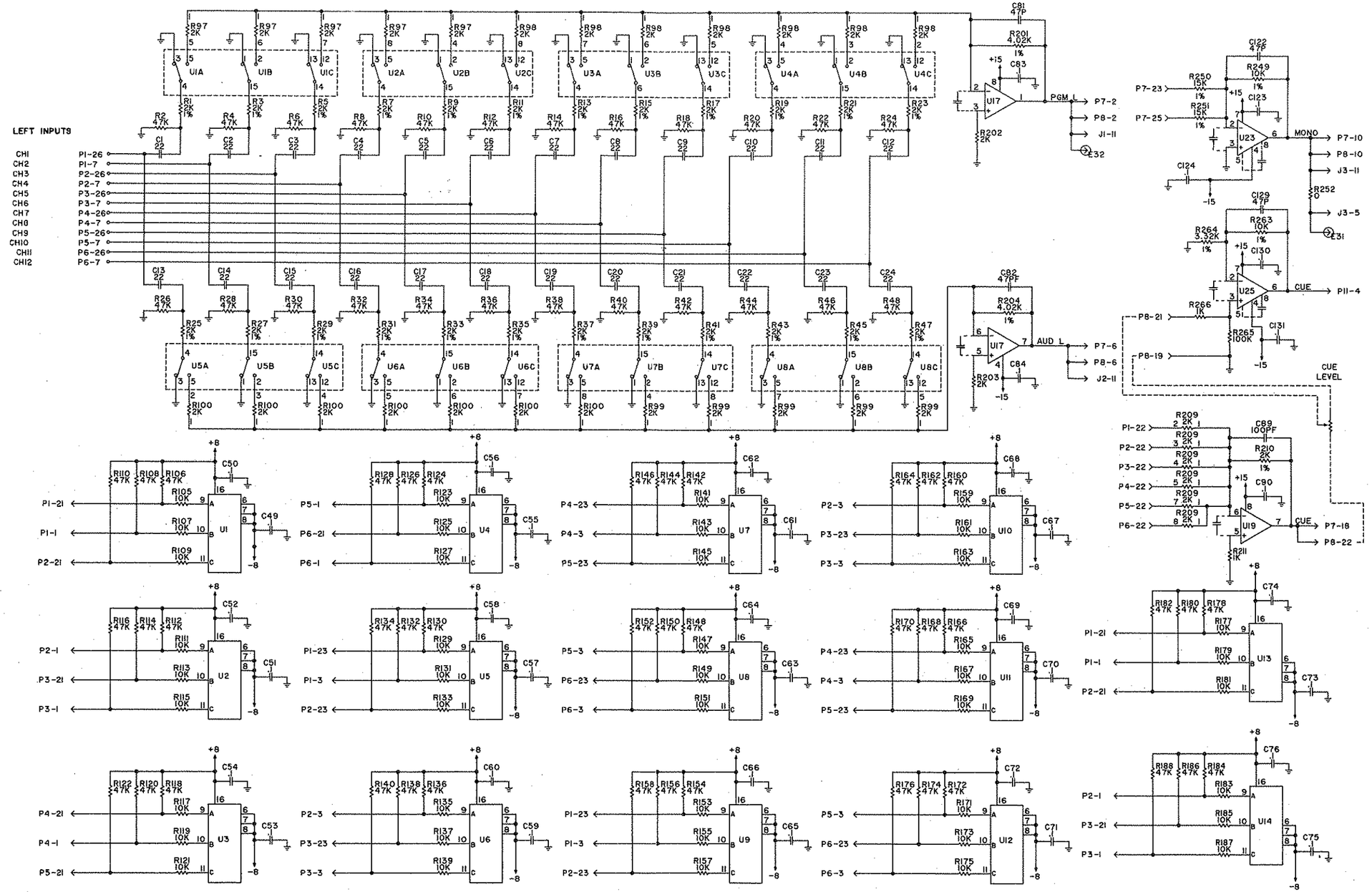

6. ⊸ INDICATES TURRET TERMINAL
5. ⊖ INDICATES BARREL TERMINAL
4. U1 THRU U16 = CD4053BC: U17 THRU U22 AND U24 = NE5532:
   U23 AND U25 = TL071: U26 = LM340T-8/UA780B: U27 = MC7908CT
3. CAPACITANCE IN UF
2. ALL RESISTORS 1/4 WATT (5%)
1. ALL RESISTANCE IN OHMS

UNLESS OTHERWISE NOTED:

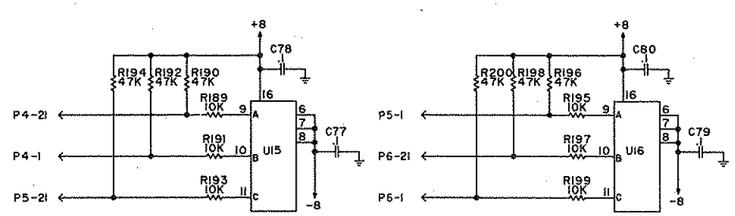

FIGURE 4-5 SCHEMATIC, MAIN BOARD
12 CHANNEL
(SHEET 1 OF 2)
839 6377 055

888-6004-003
4-17/4-18

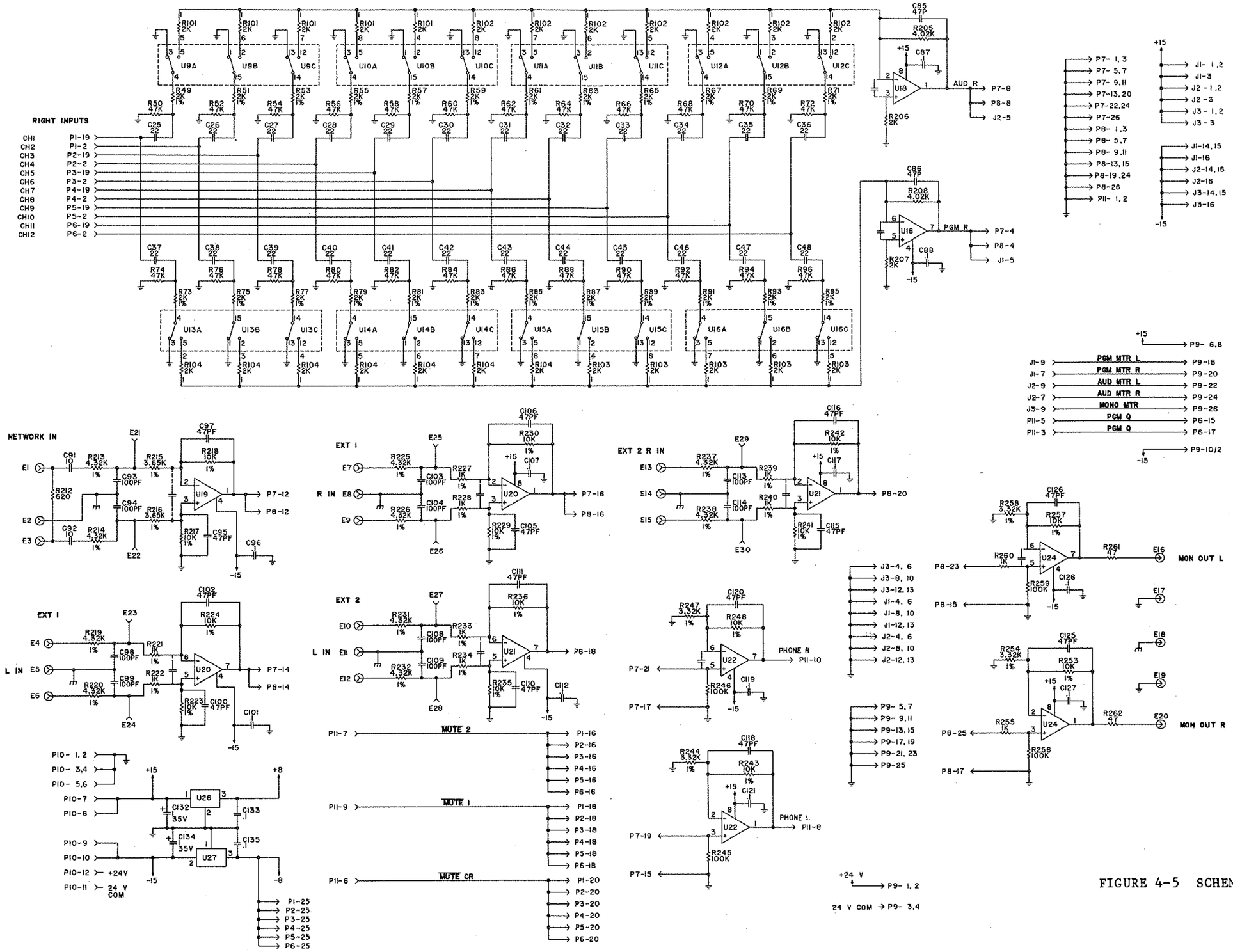

FIGURE 4-5 SCHEMATIC, MAIN BOARD
12 CHANNEL
(SHEET 2 OF 2)
839 6377 055

888-6004-003
4-19/4-20

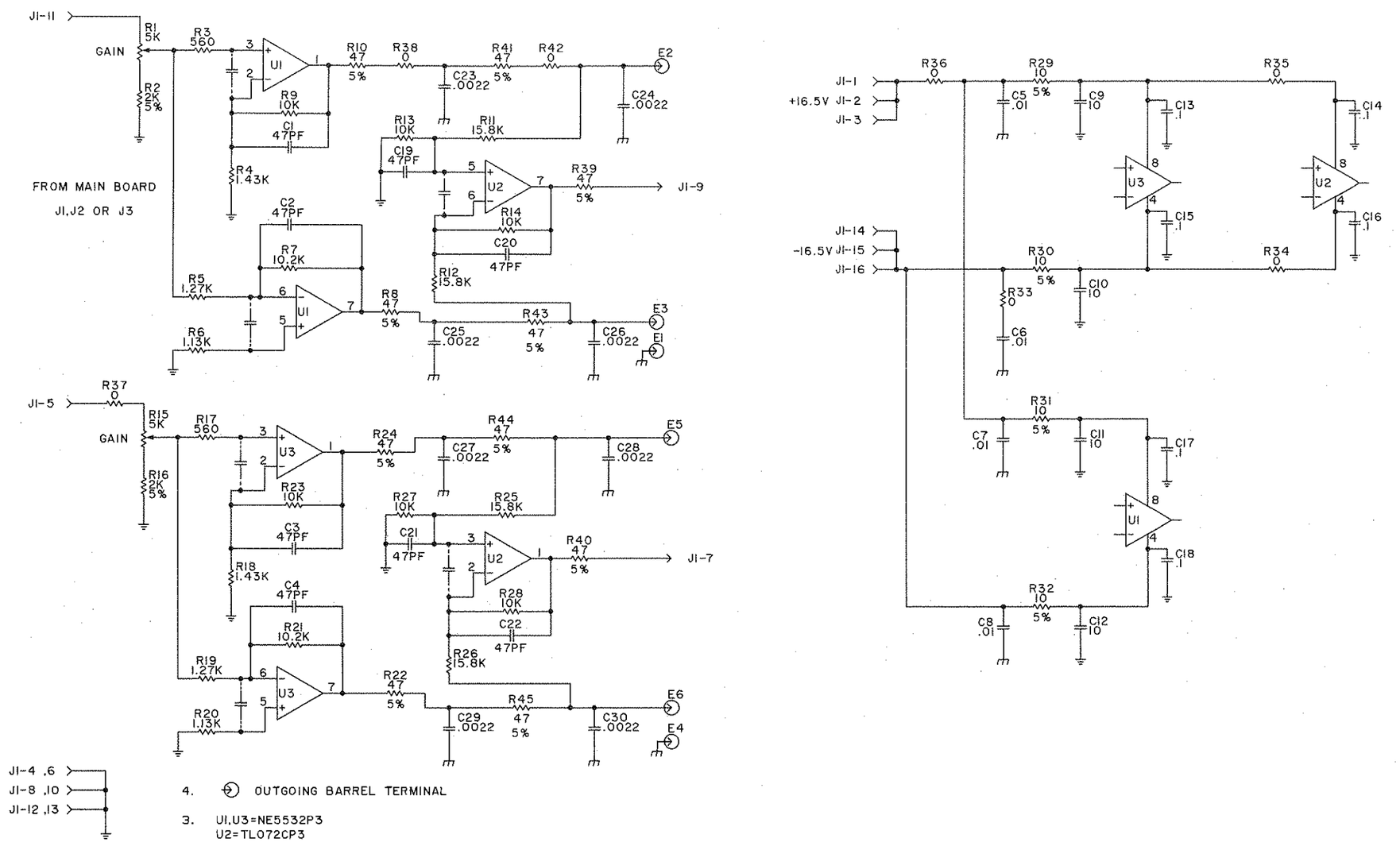

4. OUTGOING BARREL TERMINAL

3. U1,U3=NE5532P3
   U2=TL072CP3

2. RESISTANCE IS IN OHMS, 1/4W, 1%

1. CAPACITANCE IS IN UF

UNLESS OTHERWISE NOTED

FIGURE 4-6. SCHEMATIC, OUTPUT AMP
839 6377 104

888-6004-005
4-21/4-22

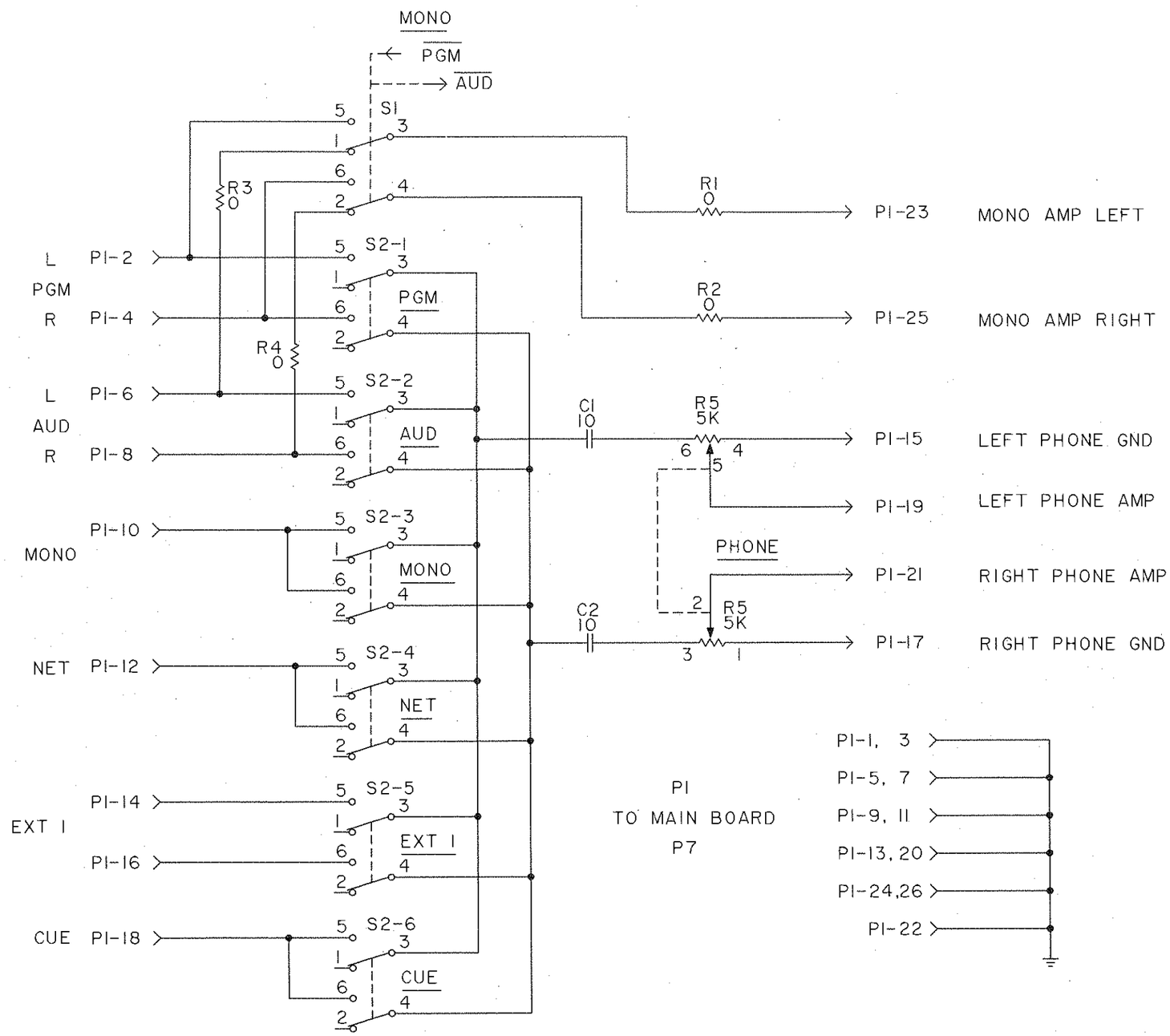

3. ALL S2 SWITCHES ARE MECHANICALLY INTERLOCKED
2. ALL CAPACITANCE IN UF
1. ALL RESISTANCE IN OHMS, 1/4 WATT, 1%
UNLESS OTHERWISE NOTED:

FIGURE 4-7 SCHEMATIC, PHONE SELECT
839 6377 011

888-6004-003
4-23/4-24

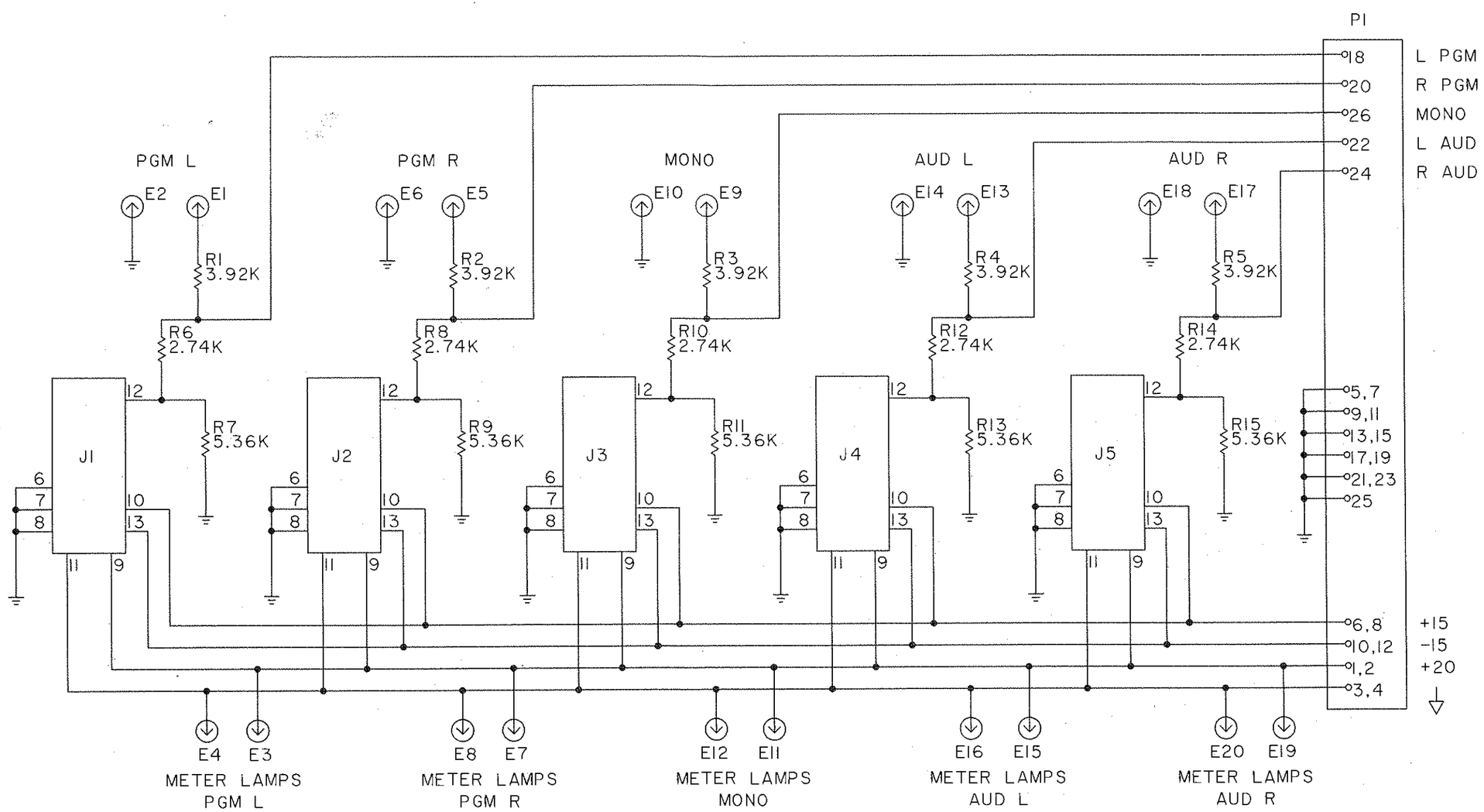

4. P1 GOES TO P9 ON MAIN BOARD
3. E1 THRU E20 BARREL CONNECTORS
2. J1 THRU J5 ARE 14 PIN IC SOCKETS
1. ALL RESISTORS 1/4 WATT, 1% UNLESS OTHERWISE NOTED

FIGURE 4-8 SCHEMATIC, METER INTERFACE
839 6377 063

888-6004-003
4-25/4-26

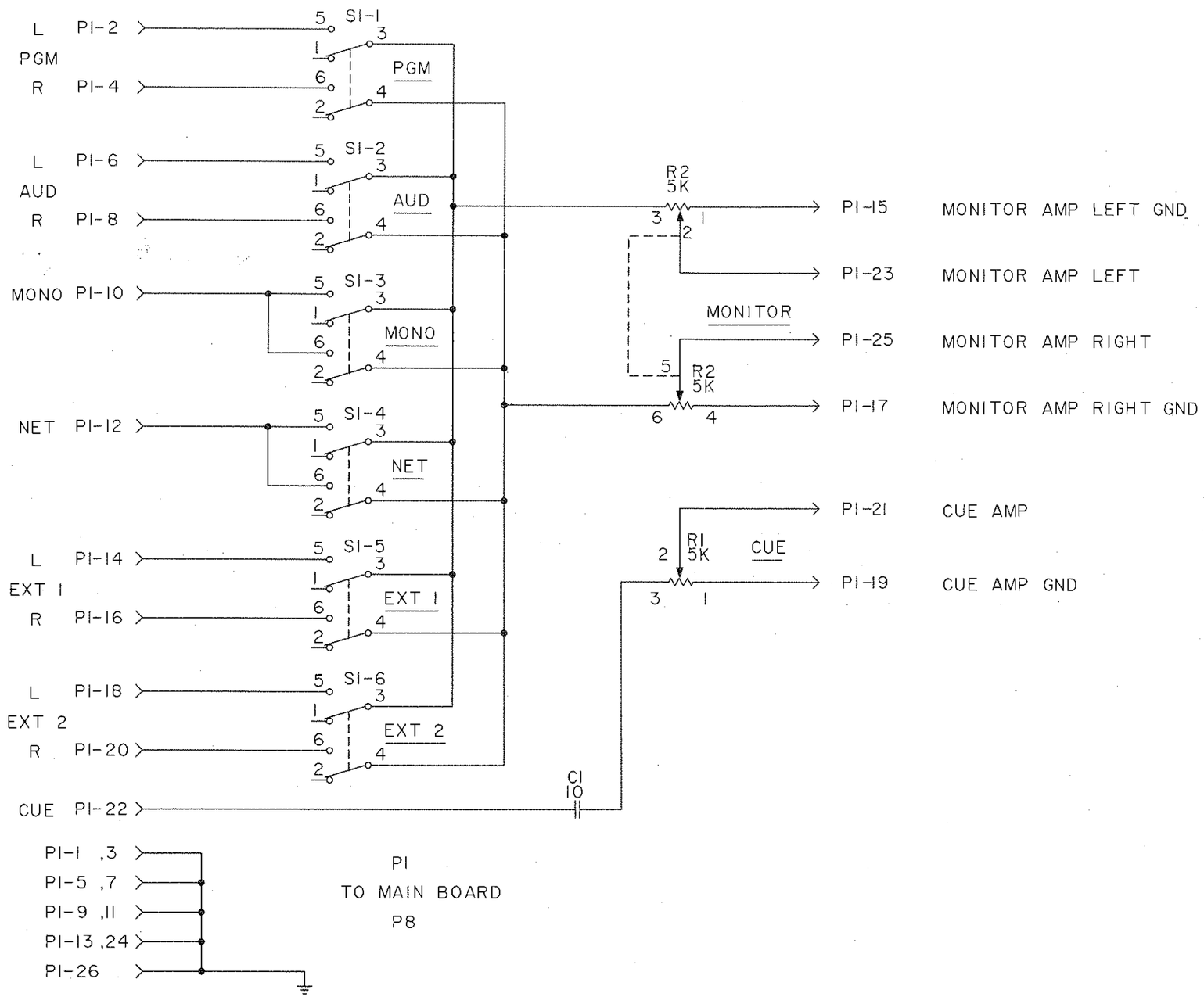

3. ALL SI SWITCHES ARE MECHANICALLY INTERLOCKED
2. ALL CAPACITANCE IN UF
1. ALL RESISTANCE IN OHMS, 1/4 WATT, 1%

UNLESS OTHERWISE NOTED:

FIGURE 4-9 SCHEMATIC, MONITOR SELECT
839 6377 013

888-6004-003
4-27/4-28

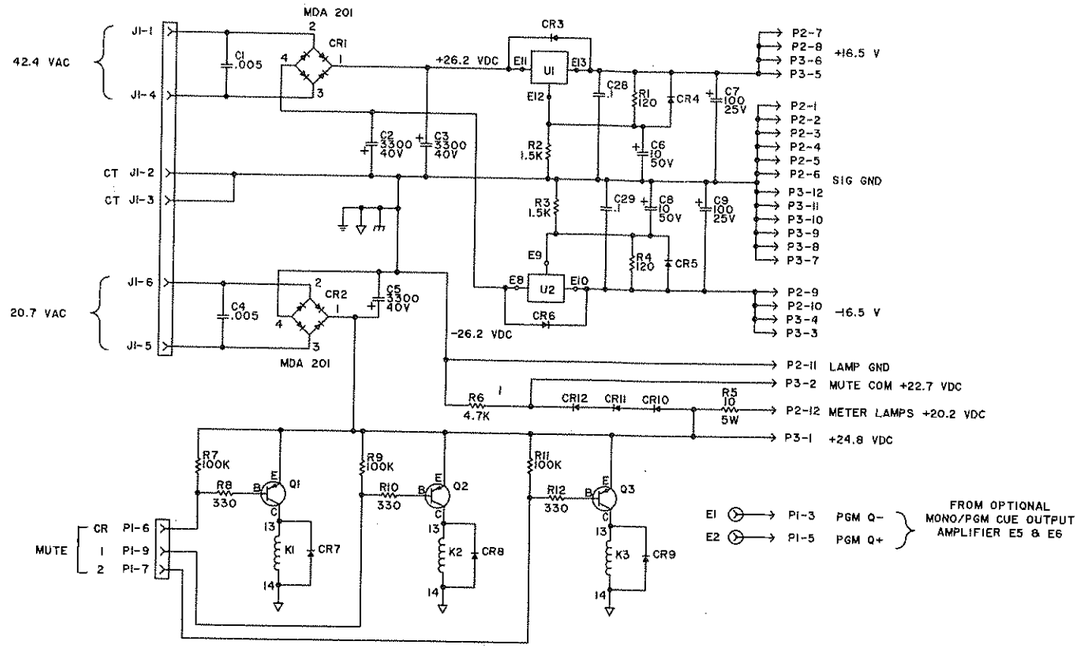

INTERCONNECTS

P1 GOES TO MAIN BOARD P11
P2 GOES TO MAIN BOARD P10
P3 GOES TO INPUT SELECT PLUG P4
J1 GOES TO POWER TRANSFORMER P1

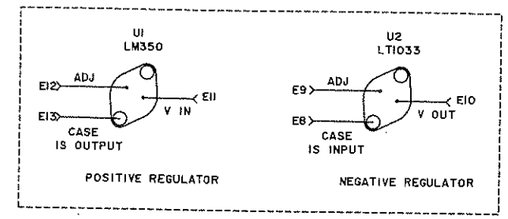

AS VIEWED FROM INSIDE CONSOLE

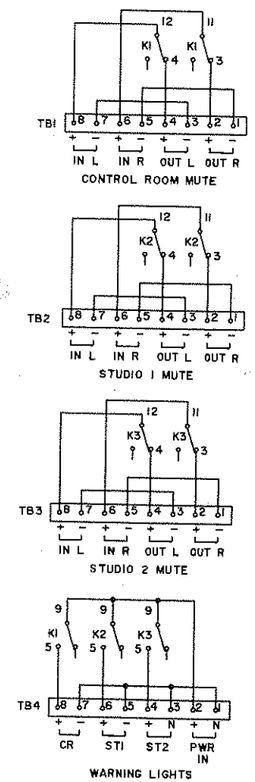

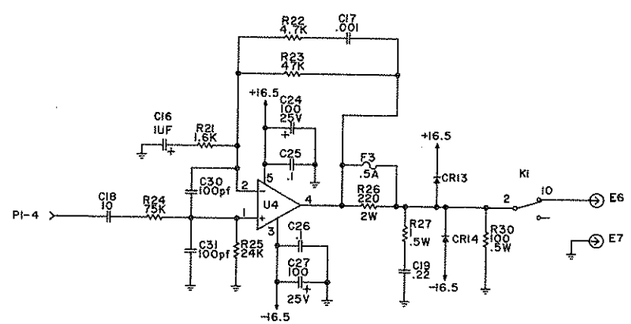

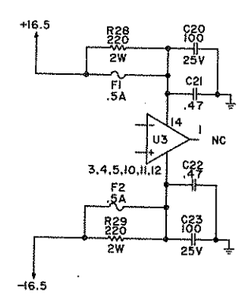

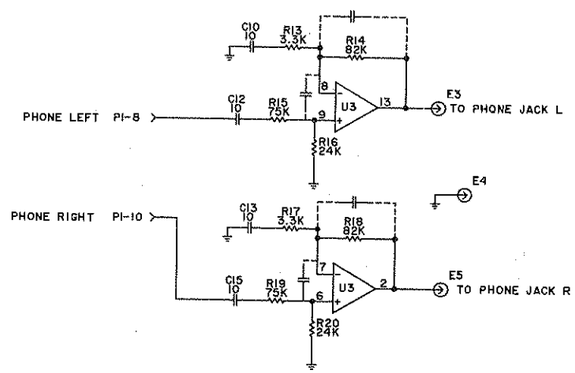

9. ALL VOLTAGES READ WITH DVM AT 120 VAC LINE
   NO RELAYS ENERGIZED: DC VOLTAGES REFERENCED TO GROUND:
   AC VOLTAGES READ ACROSS INDICATED TERMINAL
8. U1 = LM350K, U2 = LT1033CK, U3 = LM378, U4 = TDA2030
7. OUTGOING INCOMING INDICATE BARREL TERMINALS
6. CHASSIS SIGNAL +24V GND
5. RELAYS SHOWN IN RELAXED STATE
4. ALL TRANSISTORS 2N4403
3. ALL RESISTORS 1/4 WATT, 5%.
2. ALL DIODES IN4004
1. ALL CAPACITORS IN UF

UNLESS OTHERWISE NOTED:

FIGURE 4-10 SCHEMATIC
POWER SUPPLY/MUTING 12 CHANNEL
839 6377 069-E

888-6004-009
4-29/4-30

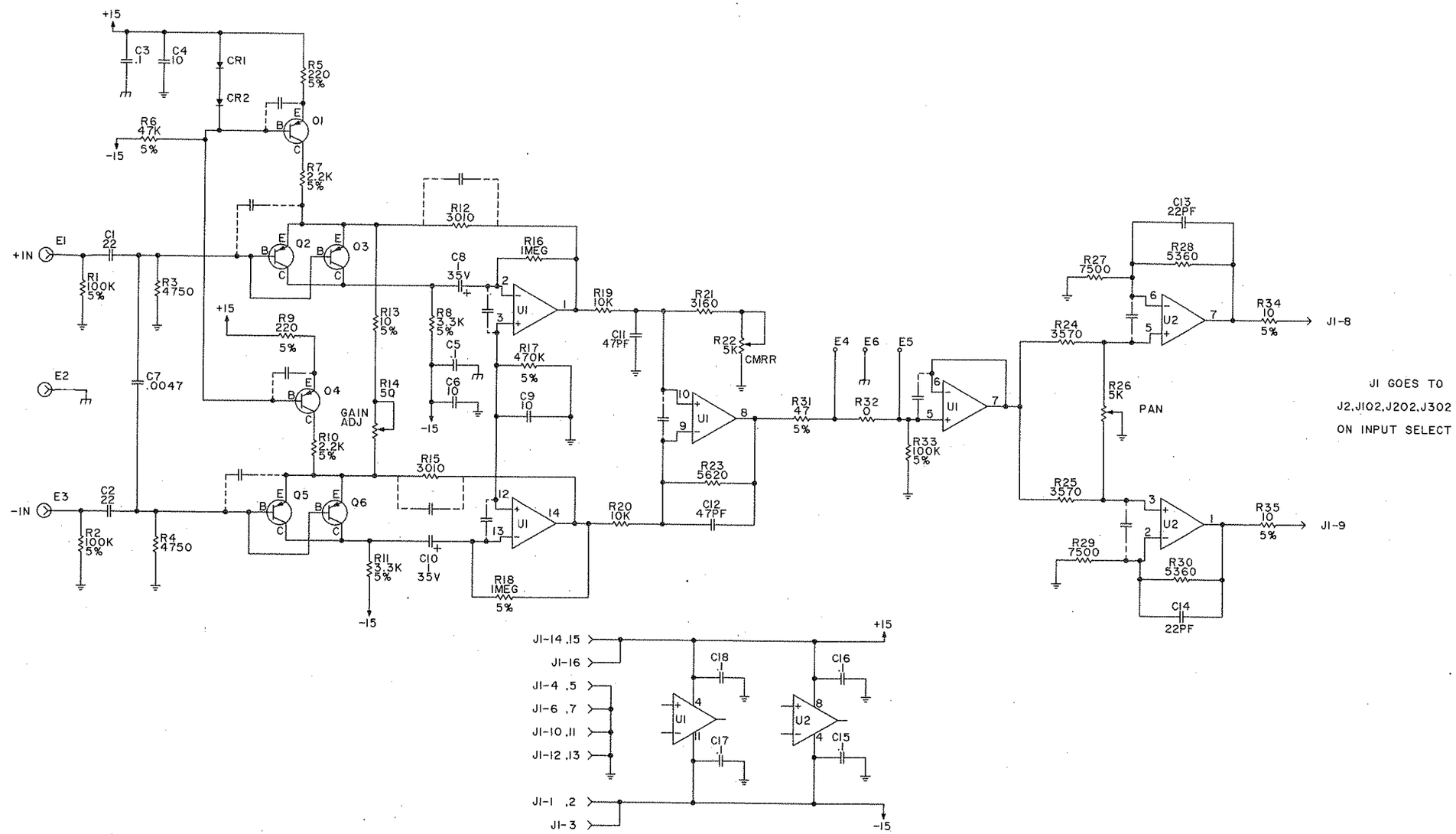

5. CR1, CR2 = 1N914
4. Q1-Q6 = MPS4355
3. U1 = TL074, U2 = NE5532
2. ALL CAPACITANCE IN UF
1. ALL RESISTANCE IN OHMS, 1/4 WATT, 1%.

UNLESS OTHERWISE NOTED:

HIGHEST REFERENCE DESIGNATORS USED

U2
C20
CR2
R35

FIGURE 4-11 SCHEMATIC, MIC PREAMP
839 6377 015

888-6004-003
4-31/4-32

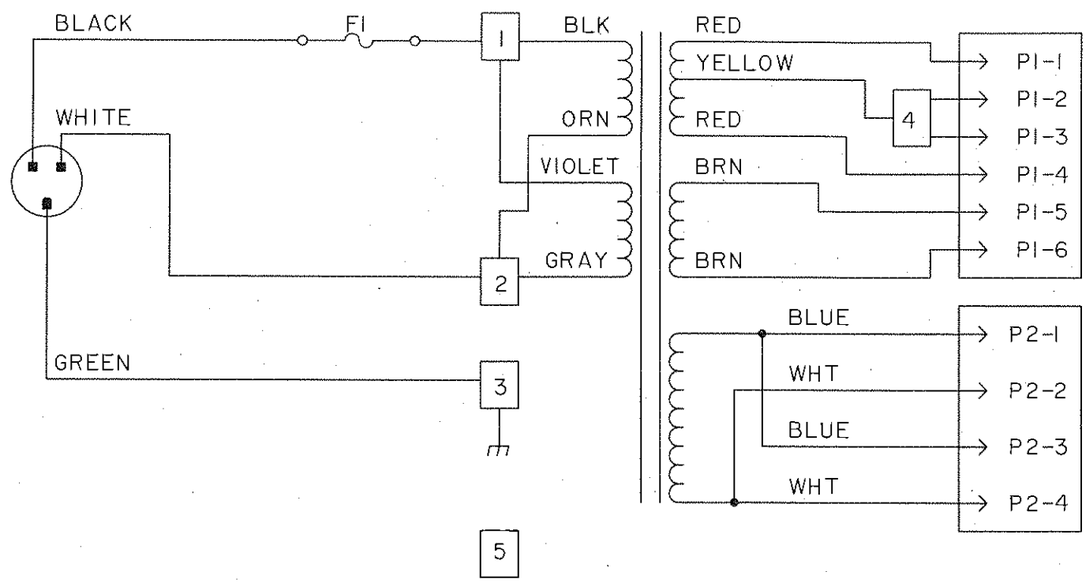

3. FOR 220 VAC OPERATION: REMOVE VIOLET WIRE FROM 1, REMOVE ORANGE WIRE FROM 2 AND CONNECT BOTH TO TERMINAL 5.

2. □ INDICATES TIE POINT ON TERMINAL STRIP

1. ○ INDICATES SOLDER LUG ON PANEL MOUNT FUSEHOLDER

FIGURE 4-12 SCHEMATIC, RM-PWR XFMER
839 6377 065

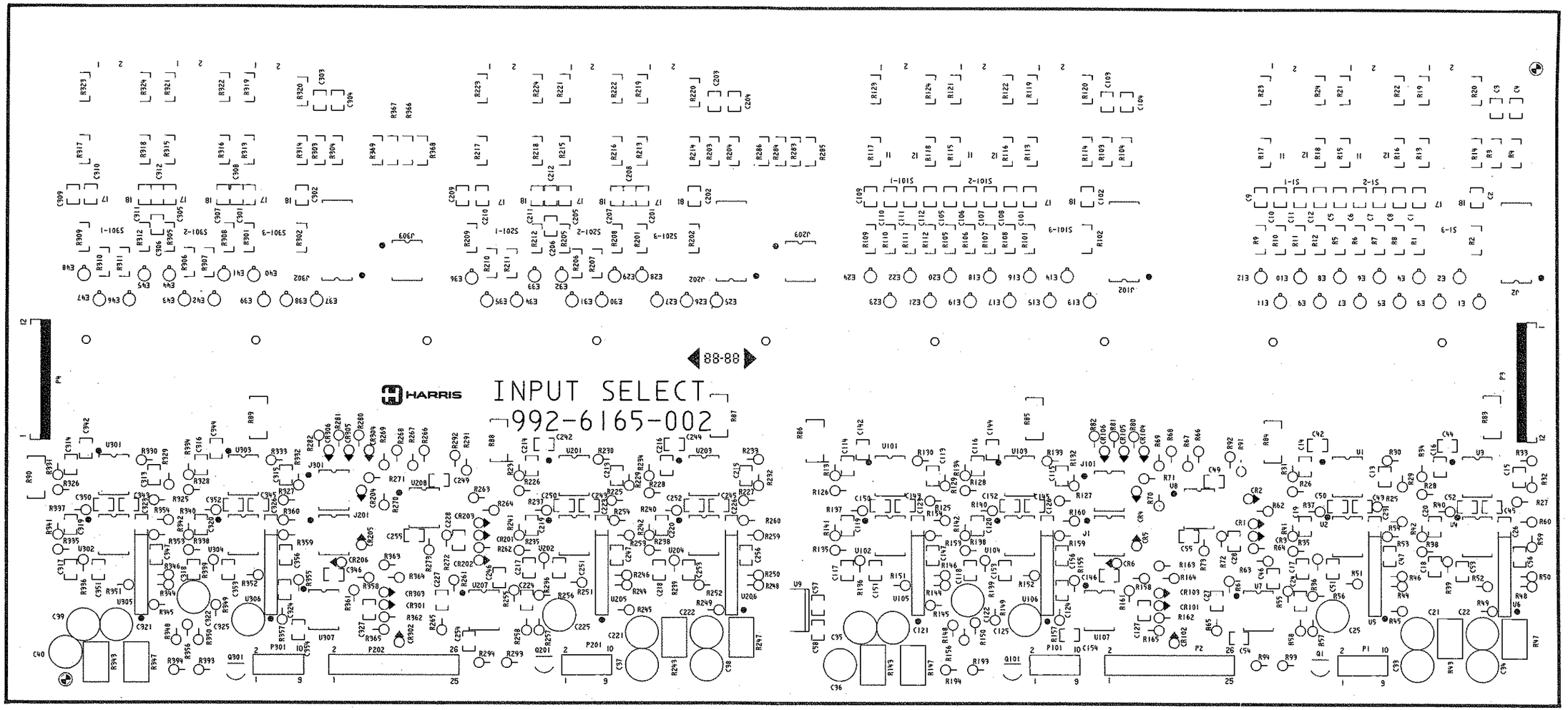

FIGURE 4-13 COMPONENT LAYOUT
INPUT SELECT
992 6165 002

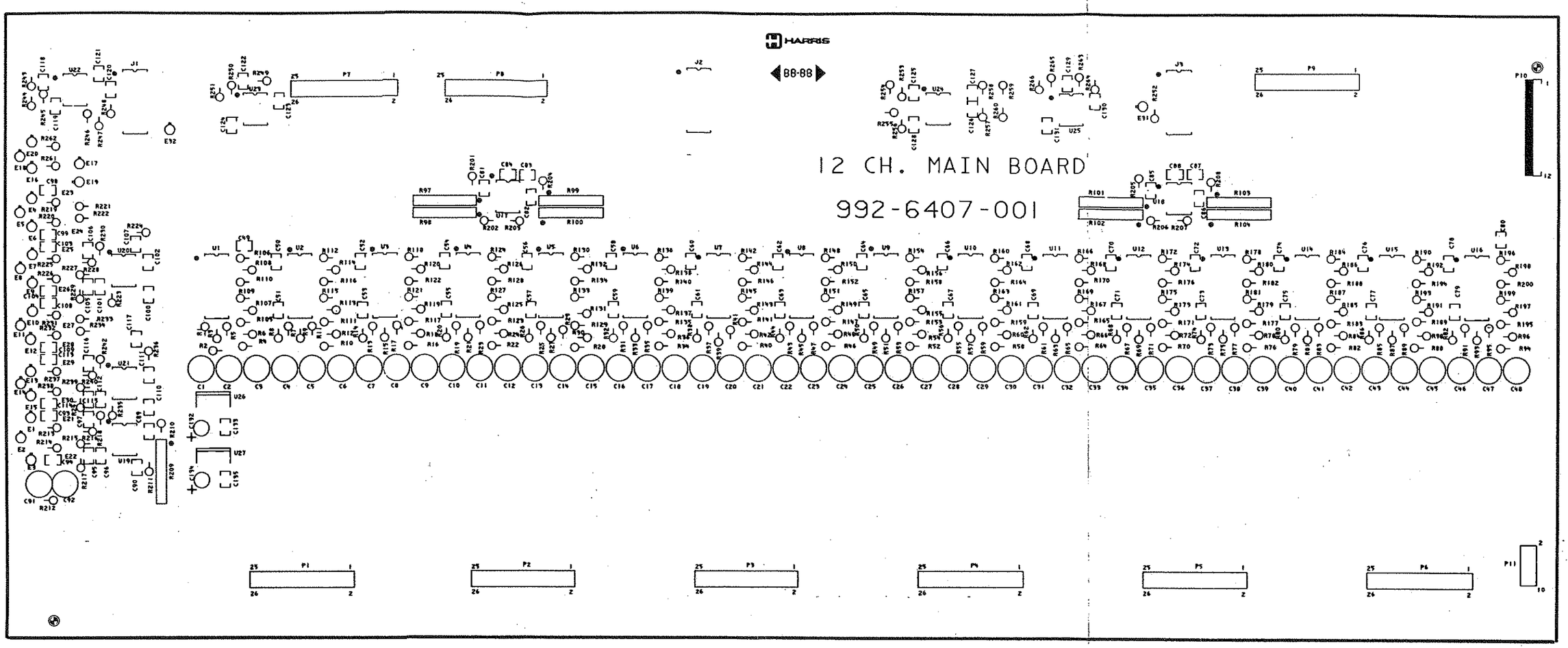

FIGURE 4-14 COMPONENT LAYOUT
MAIN BOARD
992 6173 001

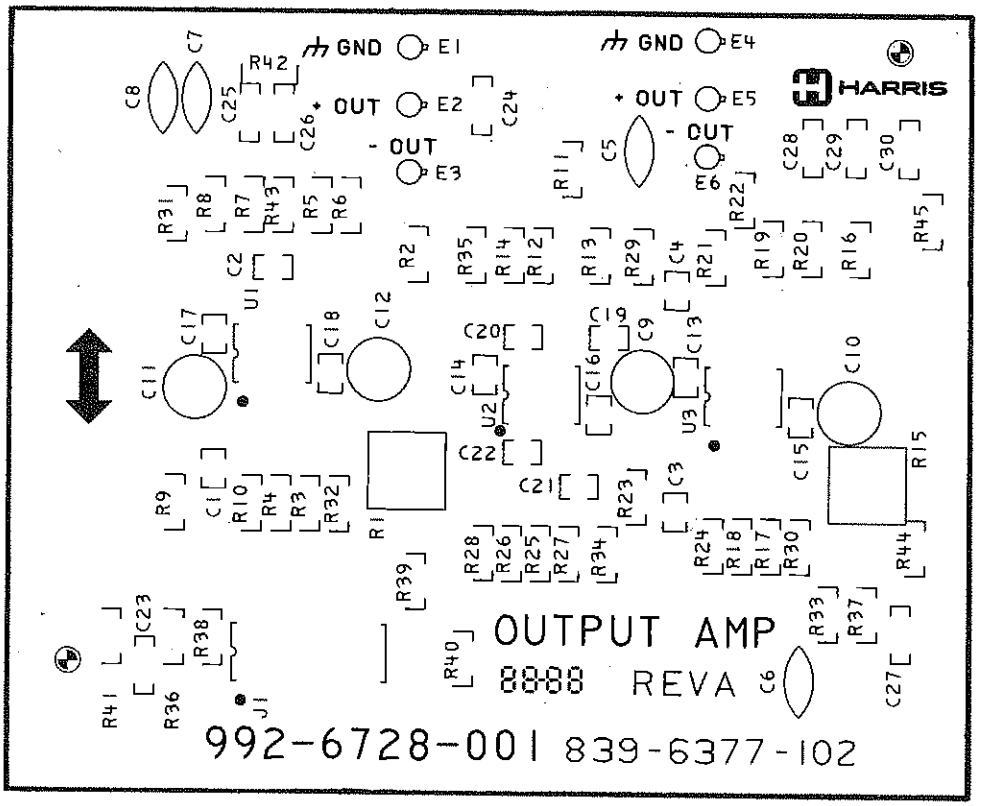

FIGURE 4-15 COMPONENT LAYOUT
OUTPUT AMP
992 6728 001-A

888-6004-005
4-39/4-40

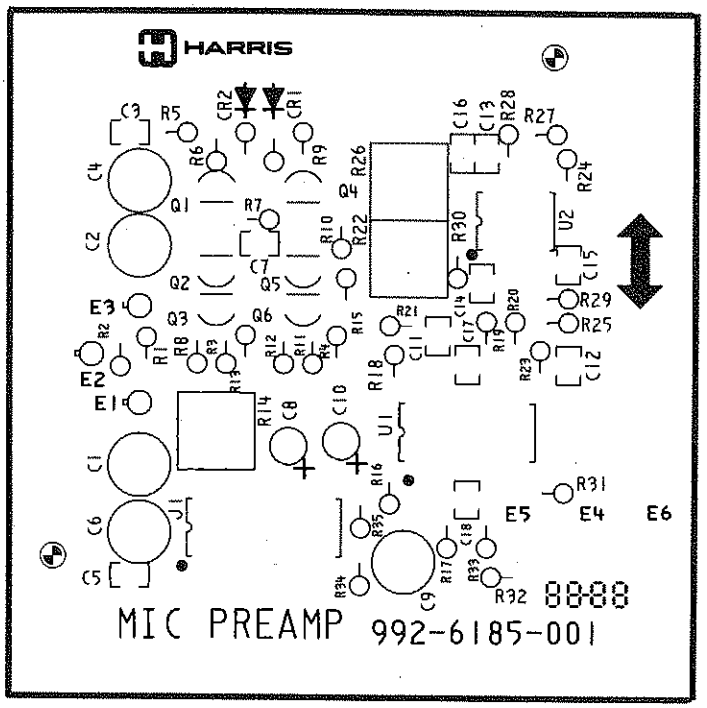

FIGURE 4-16 COMPONENT LAYOUT
MIC PREAMP
992 6185 001

WARNING: Disconnect primary power prior to servicing.

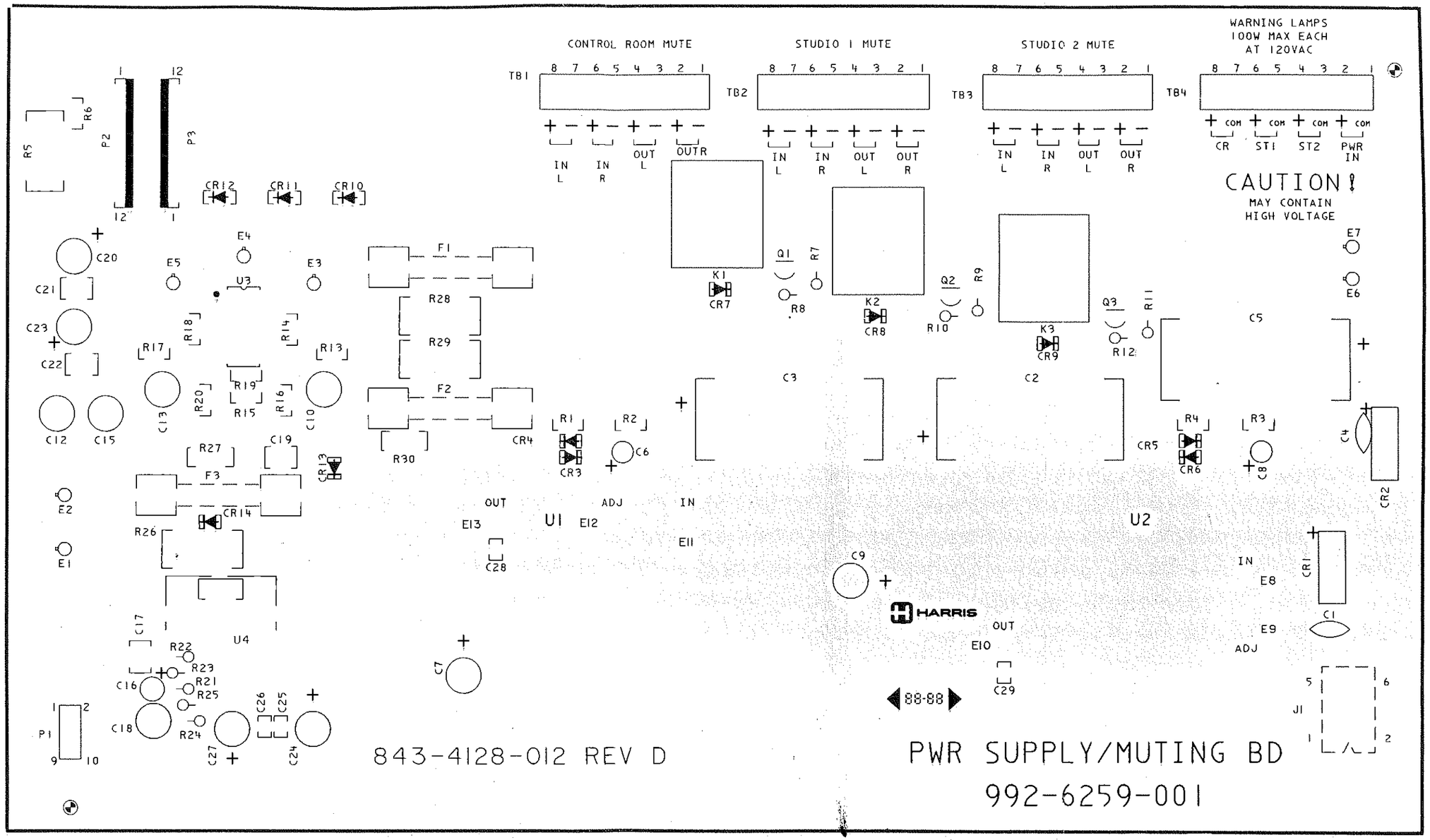

FIGURE 4-17 COMPONENT LAYOUT
POWER SUPPLY/MUTING BOARD
992 6259 001

WARNING

DISCONNECT ALL AC POWER TO CONSOLE BEFORE ATTEMPTING ANY OF THE FOLLOWING STEPS.

INSTRUCTION SHEET

MIC ATTENUATOR MODULE

994-8910-001
994-8911-001
994-8912-001
994-8913-001

These mic modules are installed in the same manner as the standard attenuator modules described in the console technical manual.

The main difference in the installation of these mic modules is in the area of muting assignment. Along with each mic module, you will find a small 8 pin DIP adapter plug, Harris Part No. 610-0989-000. This plug P1, when correctly soldered to the end of the long pair of wire coming from the attenuator plate replaces the dip switch supplied with the console.

Once the location of the mic attenuator module has been selected, determine the muting location requirement. The dip switches work as follows:

#1 of switch, pins 1 & 8 of socket, control room
#2 of switch, pins 2 & 7 of socket, studio 1
#3 of switch, pins 3 - 6 of socket, studio 2
NOT USED, pins 4 - 5 of socket, NOT USED

The long pair of wires coming from the mic attenuator plate must be soldered across pins 1 & 8, 2 & 7, or 3 & 6 of P1 depending upon the desired muting selection and then placed in the appropriate sockets of the input select boards. 4 channel input select boards have socket J1 - J101 - J201, and J-301. 2 channel input select boards have only J1 and J101.

After the long cable has been soldered to the correct pins of P1, route the cable through one of the large holes at the rear of the attenuator compartment next to the appropriate chassis mounted socket. Feed the wire under the input select board and out the rear side.

Remove the lexan protective cover and locate the correct muting assignment switch. Remove the switch noting its orientation and replace it with P1 correctly oriented. Dress the cable wires so they do not bother the standing components and replace the lexan shield. CHECK TO SEE THAT YOU DID NOT CAUSE ANY OF THE VERTICAL STANDING COMPONENTS TO SHORT TOGETHER.

J1 - J101 - J201 - J301

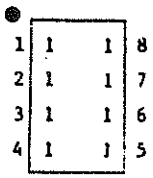

SWITCH

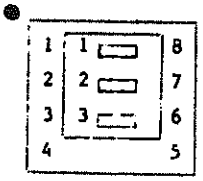

P1 REPLACEMENT

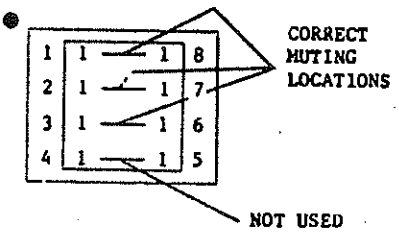

● Black dot shows location of Pin 1 of IC socket.

HARRIS

HARRIS CORPORATION Broadcast Products Division
P.O. Box 290, Quincy, IL 62301

	SHEET OF	DWG NO.
	2 2	817-1350-044

WARNING: Disconnect primary power prior to servicing.

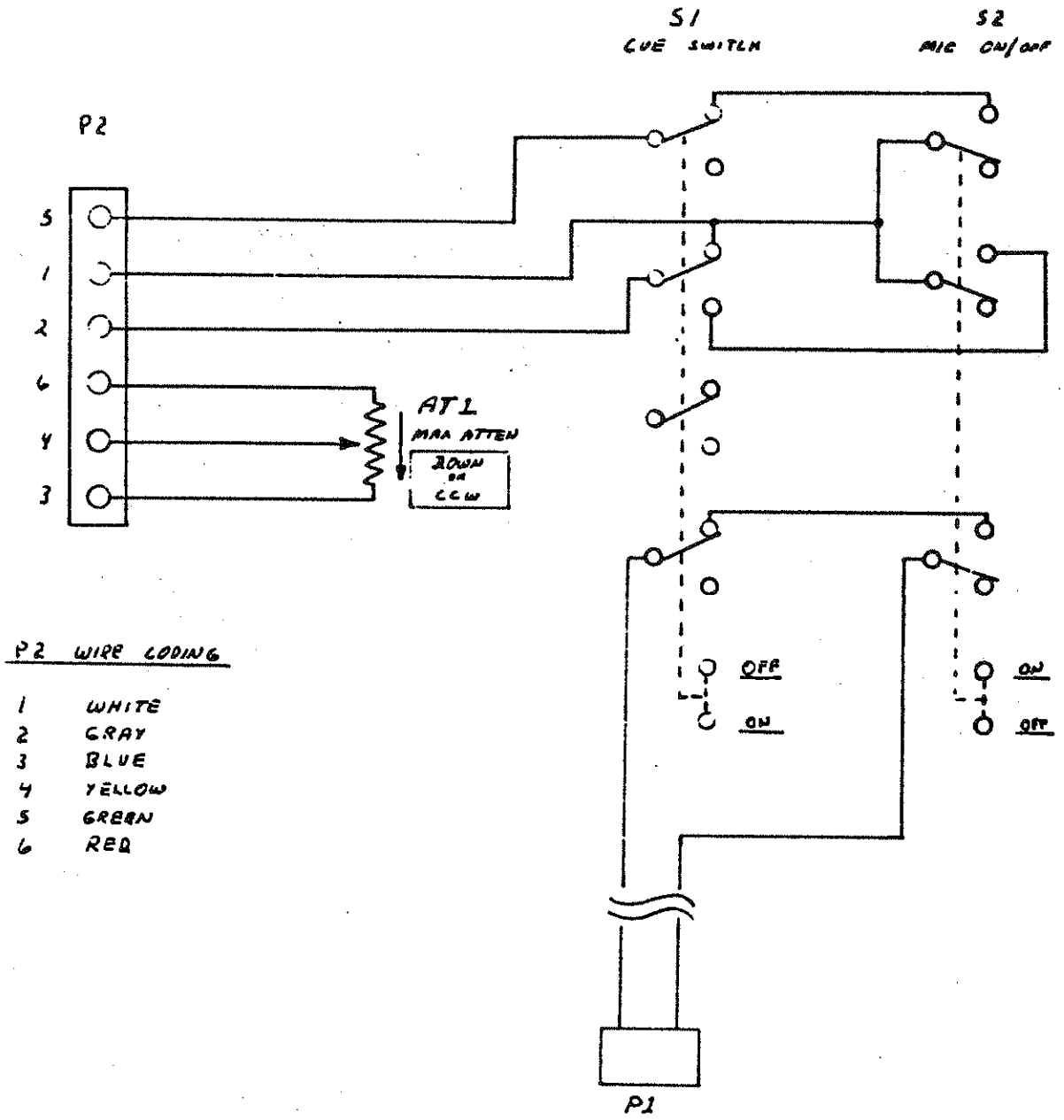

FIGURE 1. SCHEMATIC MIC ATTENUATOR MODULE, 829 9198 085-A

888-2289-001

WARNING: Disconnect primary power prior to servicing.

100 MINUTE UP/DOWN TIMER

HARRIS PART NUMBER 436 0248 000

FOR USE WITH HARRIS MEDALIST-12 CONSOLES

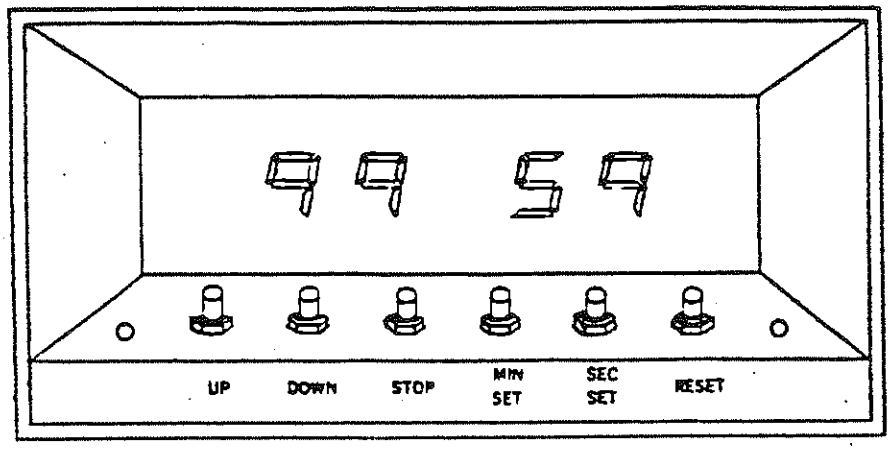

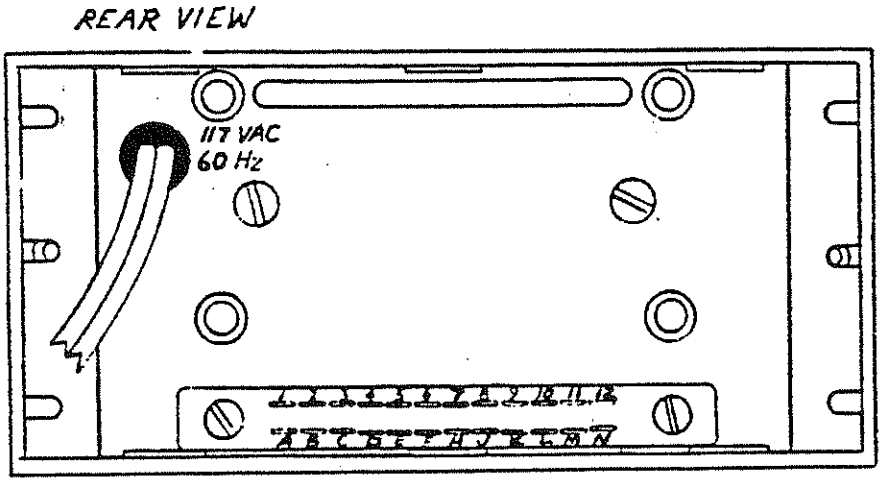

Pin	Function	Pin	Function
1	Reset	A	Vcc
2	A1	B	Stop
3	C1	C	B1
4	A2	D	D1
5	C2	E	6.3 VAC Input
6	B3	F	6.3 VAC Input
7	D3	H	C3
8	B4	J	A4
9	Comm-Sec-Min	K	C4
10	Sec Set	L	D4
11	Up	M	Min Set
12	Down	N	Ground

NOTE: All controls are activated by a momentary switch closure between the appropriate control input and ground, except for Min Set and Sec Set which should be connected between Pin 9 and appropriate pins.

WARNING: Disconnect primary power prior to servicing.

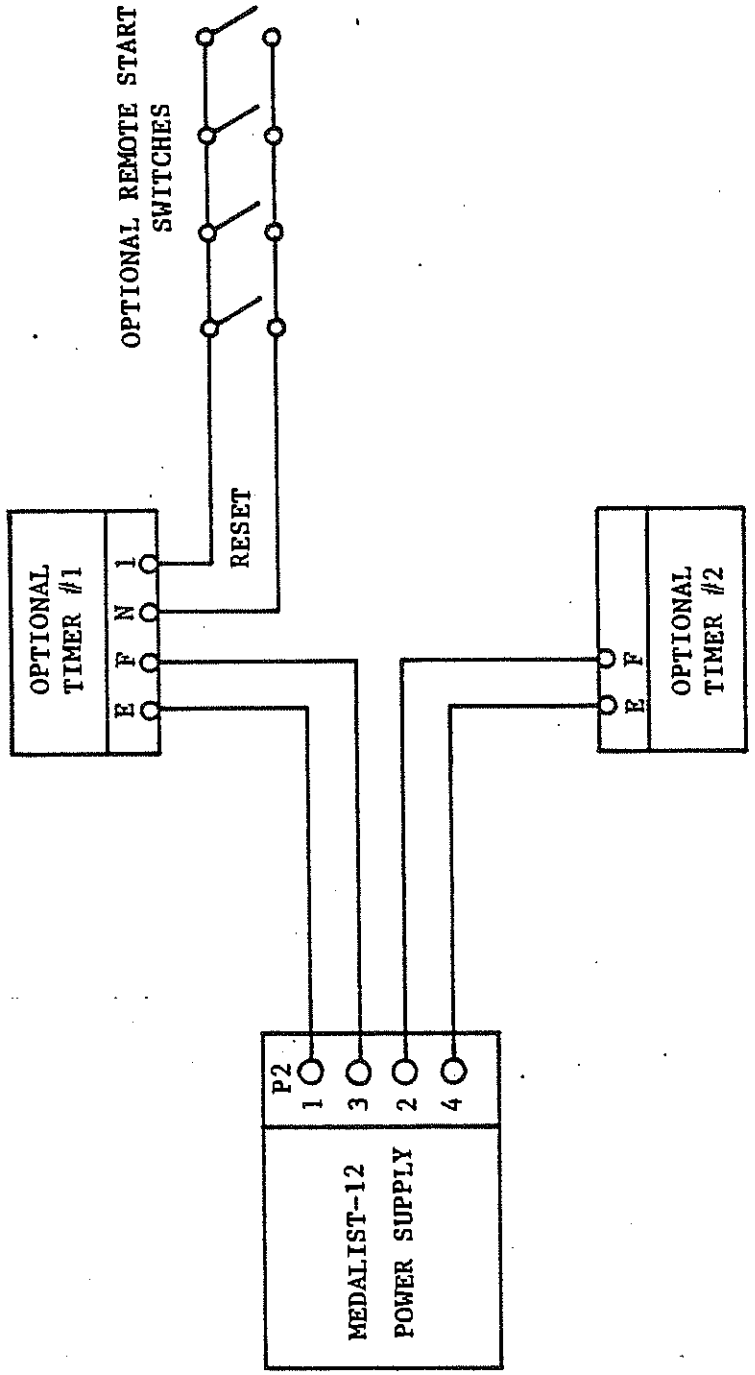

Figure 1. Wiring Diagram, 100 Minute Up/Down Timer

WARNING: Disconnect primary power prior to servicing.

12 HOUR LINE SYNC CLOCK

HARRIS PART NUMBER 436 0249 000

FOR USE WITH HARRIS MEDALIST-12 AND MEDALIST Au CONSOLES

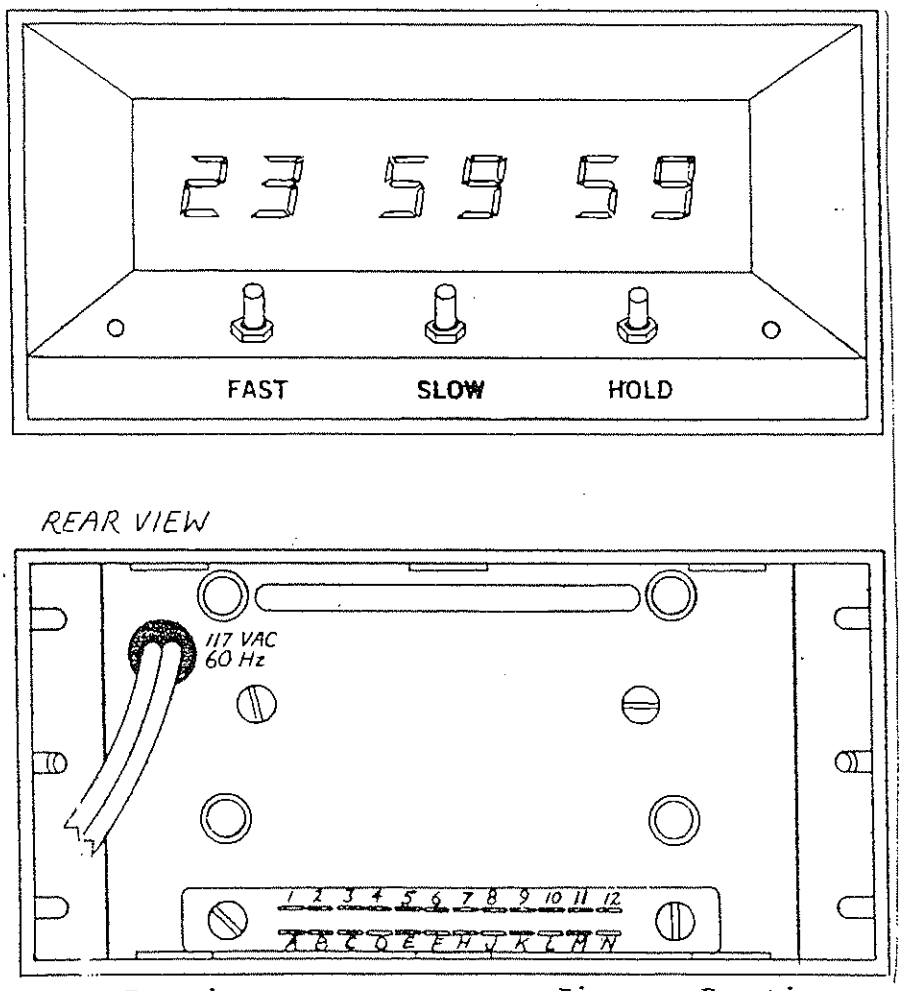

Pin	Function	Pin	Function	
1	N/C	A	Hour	Digit Outputs
2	N/C	B	10 Min	
3	N/C	C	Min	
4	N/C	D	10 Sec	
5	N/C	E	Sec	
6	Hold	F	10 Hour	
7	Vcc	H	N/C	
8	D	J	N/C	
9	C	K	N/C	
10	B	L	Fast Advance	
11	A	M	Slow Advance	
12	Ground	N	N/C	

NOTE: All controls are activated by a momentary switch closure between the appropriate control input and ground.

WARNING: Disconnect primary power prior to servicing

TECHNICAL MANUAL

4 X 1 PRE-SELECT MODULE

994 8941 001

FOR USE WITH ALL HARRIS MEDALIST CONSOLES

HARRIS

T.M. No. 888-6030-002

Printed: February 28, 1986

Returns And Exchanges

Damaged or undamaged equipment should not be returned unless written approval and a Return Authorization is received from HARRIS CORPORATION, Broadcast Division. Special shipping instructions and coding will be provided to assure proper handling. Complete details regarding circumstances and reasons for return are to be included in the request for return. Custom equipment or special order equipment is not returnable. In those instances where return or exchange of equipment is at the request of the customer, or convenience of the customer, a restocking fee will be charged. All returns will be sent freight prepaid and properly insured by the customer. When communicating with HARRIS CORPORATION, Broadcast Division, specify the HARRIS Order Number or Invoice Number.

Unpacking

Carefully unpack the equipment and preform a visual inspection to determine that no apparent damage was incurred during shipment. Retain the shipping materials until it has been determined that all received equipment is not damaged. Locate and retain all PACKING CHECK LIST's. Use the PACKING CHECK LIST to help locate and identify any components or assemblies which are removed for shipping and must be reinstalled. Also remove any shipping supports, straps, and packing materials prior to initial turn on.

Technical Assistance

HARRIS Technical and Troubleshooting assistance is available from HARRIS Field Service during normal business hours (8:00 AM - 5:00 PM Central Time). Emergency service is available 24 hours a day. Telephone 217/222-8200 to contact the Field Service Department or address correspondence to Field Service Department, HARRIS CORPORATION, Broadcast Division, P.O. Box 4290, Quincy, Illinois 62305-4290, USA. The HARRIS factory may also be contacted through a FAX facility (217/222-7041) or a TELEX service (650/372-2976).

Replaceable Parts Service

Replacement parts are available 24 hours a day, seven days a week from the HARRIS Service Parts Department. Telephone 217/222-8200 to contact the service parts department or address correspondence to Service Parts Department, HARRIS CORPORATION, Broadcast Division, P.O. Box 4290, Quincy, Illinois 62305-4290, USA. The HARRIS factory may also be contacted through a FAX facility (217/222-7041) or a TELEX service (650/372-2976).

NOTE

The # symbol used in the parts list means used with (e.g. #C001 = used with C001).

MANUAL REVISION HISTORY
4 X 1 PRE-SELECT MODULE
888-6030-xxx

REV. #	DATE	ECN	PAGES AFFECTED
002	02-28-86	29592	Replaced the following pages: Title Page, Safety Notice (i, ii, iii/iv) 1-2, 3-1 Added the following page: Manual Revision History Page

WARNING

THE CURRENTS AND VOLTAGES IN THIS EQUIPMENT ARE DANGEROUS. PERSONNEL MUST AT ALL TIMES OBSERVE SAFETY WARNINGS, INSTRUCTIONS AND REGULATIONS.

This manual is intended as a general guide for trained and qualified personnel who are aware of the dangers inherent in handling potentially hazardous electrical/electronic circuits. It is not intended to contain a complete statement of all safety precautions which should be observed by personnel in using this or other electronic equipment.

The installation, operation, maintenance and service of this equipment involves risks both to personnel and equipment, and must be performed only by qualified personnel exercising due care. HARRIS CORPORATION shall not be responsible for injury or damage resulting from improper procedures or from the use of improperly trained or inexperienced personnel performing such tasks.

During installation and operation of this equipment, local building codes and fire protection standards must be observed. The following National Fire Protection Association (NFPA) standards are recommended as references:

Automatic Fire Detectors, No. 72E

Installation, Maintenance, and Use of Portable Fire Extinguishers, No. 10

Halogenated Fire Extinguishing Agent Systems, No. 12A

WARNING

ALWAYS DISCONNECT POWER BEFORE OPENING COVERS, DOORS, ENCLOSURES, GATES, PANELS OR SHIELDS. ALWAYS USE GROUND- ING STICKS AND SHORT OUT HIGH VOLTAGE POINTS BEFORE SERVICING. NEVER MAKE INTERNAL ADJUSTMENTS, PERFORM MAINTENANCE OR SERVICE WHEN ALONE OR WHEN FATIGUED.

Do not remove, short-circuit or tamper with interlock switches on access covers, doors, enclosures, gates, panels or shields. Keep away from live circuits, know your equipment and don't take chances.

WARNING

IN CASE OF EMERGENCY ENSURE THAT POWER HAS BEEN DISCONNECTED.

WARNING

IF OIL FILLED OR ELECTROLYTIC CAPACITORS ARE UTILIZED IN YOUR EQUIPMENT, AND IF A LEAK OR BULGE IS APPARENT ON THE CAPACITOR CASE WHEN THE UNIT IS OPENED FOR SERVICE OR MAINTENANCE, ALLOW THE UNIT TO COOL DOWN BEFORE ATTEMPTING TO REMOVE THE DEFECTIVE CAPACITOR. DO NOT ATTEMPT TO SERVICE A DEFECTIVE CAPACITOR WHILE IT IS HOT DUE TO THE POSSIBILITY OF A CASE RUPTURE AND SUBSEQUENT INJURY.

WARNING: Disconnect primary power prior to servicing

TREATMENT OF ELECTRICAL SHOCK

1. IF VICTIM IS NOT RESPONSIVE FOLLOW THE A-B-Cs OF BASIC LIFE SUPPORT.
   PLACE VICTIM FLAT ON HIS BACK ON A HARD SURFACE

(A) AIRWAY

IF UNCONSCIOUS,
OPEN AIRWAY

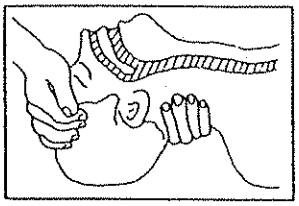

LIFT UP NECK
PUSH FOREHEAD BACK
CLEAR OUT MOUTH IF NECESSARY
OBSERVE FOR BREATHING

(B) BREATHING

IF NOT BREATHING,
BEGIN ARTIFICIAL BREATHING

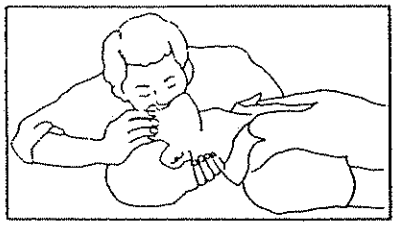

TILT HEAD
PINCH NOSTRILS
MAKE AIRTIGHT SEAL

4 QUICK FULL BREATHS
REMEMBER MOUTH TO MOUTH RESUSCITATION MUST BE COMMENCED AS SOON AS POSSIBLE

CHECK
CAROTID PULSE

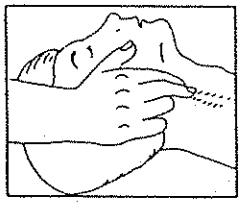

IF PULSE ABSENT,
BEGIN ARTIFICIAL
CIRCULATION

(C) CIRCULATION

DEPRESS STERNUM 1 1/2 TO 2 INCHES

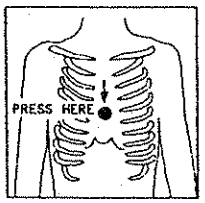

APPROX. RATE
OF COMPRESSIONS
--80 PER MINUTE

ONE RESCUER
15 COMPRESSIONS
2 QUICK BREATHS

APPROX. RATE
OF COMPRESSIONS
---60 PER MINUTE

TWO RESCUERS
5 COMPRESSIONS
1 BREATH

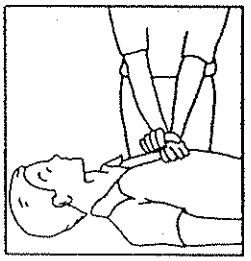

NOTE: DO NOT INTERRUPT RHYTHM OF COMPRESSIONS WHEN SECOND PERSON IS GIVING BREATH

CALL FOR MEDICAL ASSISTANCE AS SOON AS POSSIBLE

2. IF VICTIM IS RESPONSIVE.

   A. KEEP THEM WARM
   B. KEEP THEM AS QUIET AS POSSIBLE
   C. LOOSEN THEIR CLOTHING
   D. A RECLINING POSITION IS RECOMMENDED

WARNING: Disconnect primary power prior to servicing

FIRST-AID

Personnel engaged in the installation, operation, maintenance or servicing of this equipment are urged to become familiar with first-aid theory and practices. The following information is not intended to be complete first-aid procedures, it is a brief and is only to be used as a reference. It is the duty of all personnel using the equipment to be prepared to give adequate Emergency First Aid and thereby prevent avoidable loss of life.

Treatment of Electrical Burns

1. Extensive burned and broken skin

   a. Cover area with clean sheet or cloth. (Cleanest available cloth article.)

   b. Do not break blisters, remove tissue, remove adhered particles of clothing, or apply any salve or ointment.

   c. Treat victim for shock as required.

   d. Arrange transportation to a hospital as quickly as possible.

   e. If arms or legs are affected keep them elevated.

   NOTE

   If medical help will not be available within an hour and the victim is conscious and not vomiting, give him a weak solution of salt and soda: 1 level teaspoonful of salt and 1/2 level teaspoonful of baking soda to each quart of water (neither hot or cold). Allow victim to sip slowly about 4 ounces (a half of glass) over a period of 15 minutes. Discontinue fluid if vomiting occurs. (Do not give alcohol.)

2. Less severe burns - (1st & 2nd degree)

   a. Apply cool (not ice cold) compresses using the cleanest available cloth article.

   b. Do not break blisters, remove tissue, remove adhered particles of clothing, or apply salve or ointment.

   c. Apply clean dry dressing if necessary.

   d. Treat victim for shock as required.

   e. Arrange transportation to a hospital as quickly as possible.

   f. If arms or legs are affected keep them elevated.

REFERENCE:

ILLINOIS HEART ASSOCIATION

AMERICAN RED CROSS STANDARD FIRST AID AND PERSONAL SAFETY MANUAL (SECOND EDITION)

SECTION I

INSTALLATION

The HARRIS 4 X 1 Pre-Select Module is a MEDALIST series product designed to increase the number of audio feeds available thru a given input channel.

The module has a printed circuit board with a four station interlock "Shadow" type switch mounted on the right hand side of the linear P&G fader.

Audio connections are made via AMP multi-pin sockets and the provided header assemblies. Although these sockets require a special crimping tool, a satisfactory connection can be made with a pair of small needle nose pliers and a small wattage soldering iron following the steps below and using Figure 1-1 as a guide.

Step 1. Strip 1/4" of insulation from end of wire being careful not to damage conductor.

Step 2. Place stripped end of wire into amp socket so that the insulation is between the tall tabs at end of socket. Conductor should be even with or slightly into barrel of socket.

Step 3. Using a pair of small needle nose pliers, bend tall tabs to hold insulated portion of wire in place.

Step 4. Using the small needle nose pliers again, bend the smaller tabs over the wire's conductor to hold it in place.

Step 5. Secure the wire to the socket by soldering it in place with a small wattage iron and solder. Care should be taken to use only a small amount of solder as a large solder drop may prevent the socket from properly engaging the header and producing a poor connection.

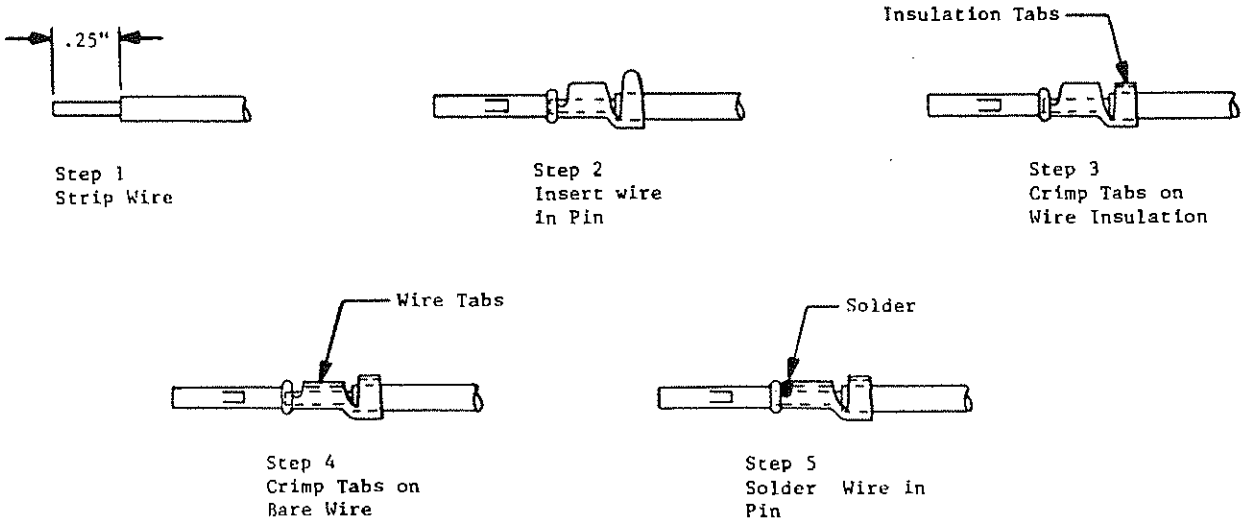

Figure 1-1. Socket Assembly for Audio Connection

WARNING: Disconnect primary power prior to servicing.

Step 6. Place assembled socket in its appropriate hole in the header and carefully insert until it locks into place with a click. Refer to schematic 839-6377-092 (Figure 4-2) for proper header wiring.

Step 7. Repeat Steps 1 through 6 as necessary to complete installation.

For your convenience, provision has been made to carry through the shield to ground. However, if you are operating in a strong RF field, it is advisable that you tie these shields directly to the ground system upon entering the console.

Stereo audio feeds for inputs 1 and 2 go to P2, located at the lower rear of the printed circuit board. Stereo audio feeds for inputs 3 and 4 go to P1, located at the lower front of the printed circuit board. Selected audio outputs leave the printed circuit board via P3, located at the upper rear of the printed circuit board. The audio output can be taken to any of the three inputs on any console input channel. See Figure 1-2.

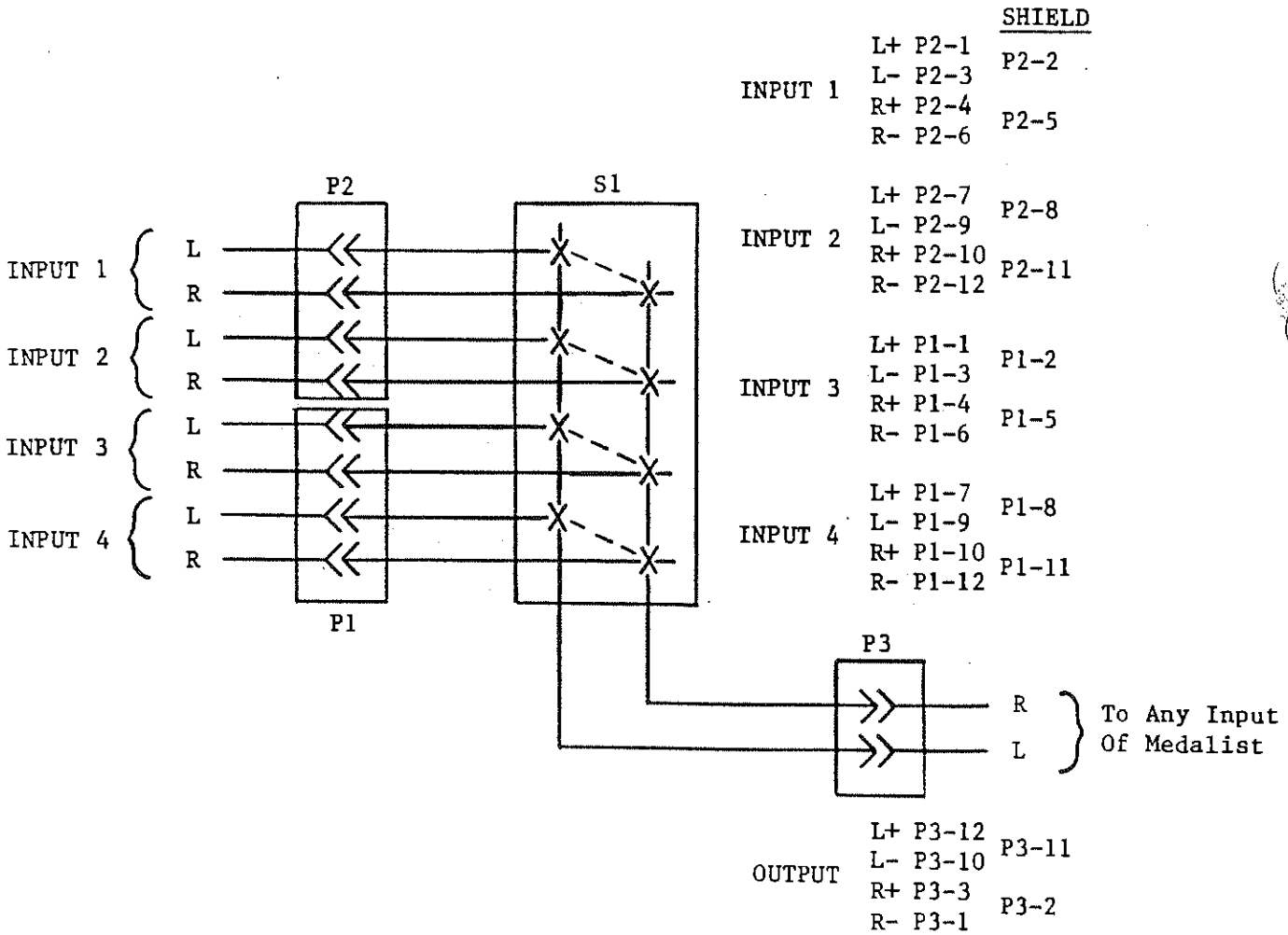

Figure 1-2. Wiring Diagram, 4 X 1 PRE-SELECT AUDIO OUTPUT TO MEDALIST INPUT

SECTION II

MODIFICATIONS

This module is equipped with a P&G fader that has a built-in cue detent switch position. This switch (S2) is wired in series with the standard top panel switch (S1).

Due to the construction of the P&G fader, the "cue position" is in the fader travel. As a result of this, when the fader is pulled all the way down, but not into cue, less than full attenuation is achieved. Should this condition cause an unacceptable bleed through, the P&G fader may be modified to remove the "On Fader Cue" using the following steps.

Step 1. Locate the cue switch assembly at the bottom end of the P&G fader.

Step 2. Remove the two small nuts holding the micro switch to the angle bracket.

Step 3. Remove the micro switch and screws from the angle bracket.

Step 4. Remove the angle bracket from the P&G fader by removing the two screws securing it to the fader bottom.

Step 5. Remove the small black button at the end of the P&G fader which activates the cue switch.

Step 6. Locate the two wires to be removed from the P&G fader cue switch.

Step 7. Remove wires from cue switch, tie together, solder and insulate using shrink tubing or electrical tape.

The modification is now complete. Check the fader for full travel with no detent and that the front panel cue switch (S1) operates the cue function properly.

SECTION III

PARTS LIST

INTRODUCTION

This section provides description, reference designator, and HARRIS part number for selected replaceable parts and assemblies required for proper maintenance of your HARRIS equipment.

REPLACEABLE PARTS SERVICE

Replacement parts are available 24 hours a day, seven days a week from the HARRIS Service Parts Department. Telephone 217/222-8200 to contact the service parts department or address correspondence to Service Parts Department, HARRIS CORPORATION, Broadcast Transmission Division, P.O. Box 4290, Quincy, Illinois 62305-4290, USA. The HARRIS factory may also be contacted through a TWX facility (910-246-3212) or a TELEX service (247319).

TECHNICAL ASSISTANCE

HARRIS Technical and Troubleshooting assistance is available from HARRIS Field Service during normal business hours (8:00 AM - 5:00 PM Central Time). Emergency service is available 24 hours a day. Telephone 217/222-8200 to contact the Field Service Department or address correspondence to Field Service Department, HARRIS CORPORATION, Broadcast Transmission Division, P.O. Box 4290, Quincy, Illinois 62305-4290, USA. The HARRIS factory may also be contacted through a TWX facility (910-246-3212) or a TELEX service (247319).

Table 3-1. 4 X 1 Pre-Select Module - 994 8941 001

Ref. Symbol	Harris Part No.	Description	Qty.
	354 0627 000	Contact, Socket	30
	354 0729 000	Contact, Socket 30-26 Awg	6
	554 0356 000	Fader, Lin 10K Ohm	1
	598 0427 000	Button, Status Indicator	1
	604 0998 000	Sw, PB 1 Position Push-Push	1
	610 0912 000	Housing, Plug 6 Ckt	1
J001-J003	612 0859 000	Socket, Housing 12 Ckt	3
	646 1389 000	Overlay, Atten-Linear	1
	817 1350 049	Strap, Switch Designation	1
	829 9198 104	Schematic, Atten P&G Lin/Sw	0
	943 4128 039	Module, Atten Plate	1
	992 6711 001	PWB, 4 X 1 Pre-Select	1

Table 3-2. 4 X 1 Pre-Select Board - 992 6711 001

Ref. Symbol	Harris Part No.	Description	Qty.
	604 1052 000	Switch, PB 4 Station	1
P001-P003	610 0721 000	Header, 12 Pin	3
	839 6377 091	PWB, 4 X 1 Pre-Select	1
	839 6377 092	Schematic, P&G 4 X 1 Pre-Select	0

SECTION IV

DIAGRAMS

INTRODUCTION

This section contains all the schematics and logic diagrams for equipment covered in this manual. The diagrams in this section are as follows:

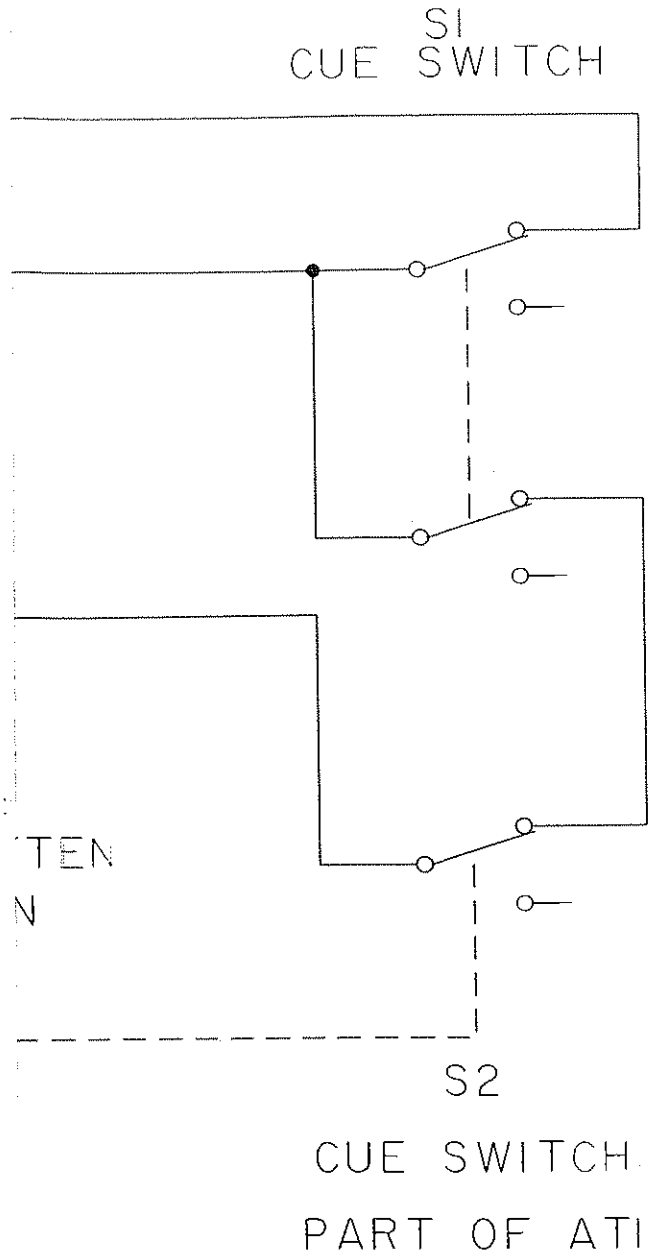

FIGURE 4-1 SCHEMATIC
ATTENUATOR P&G LIN/SWITCH
829 9198 104

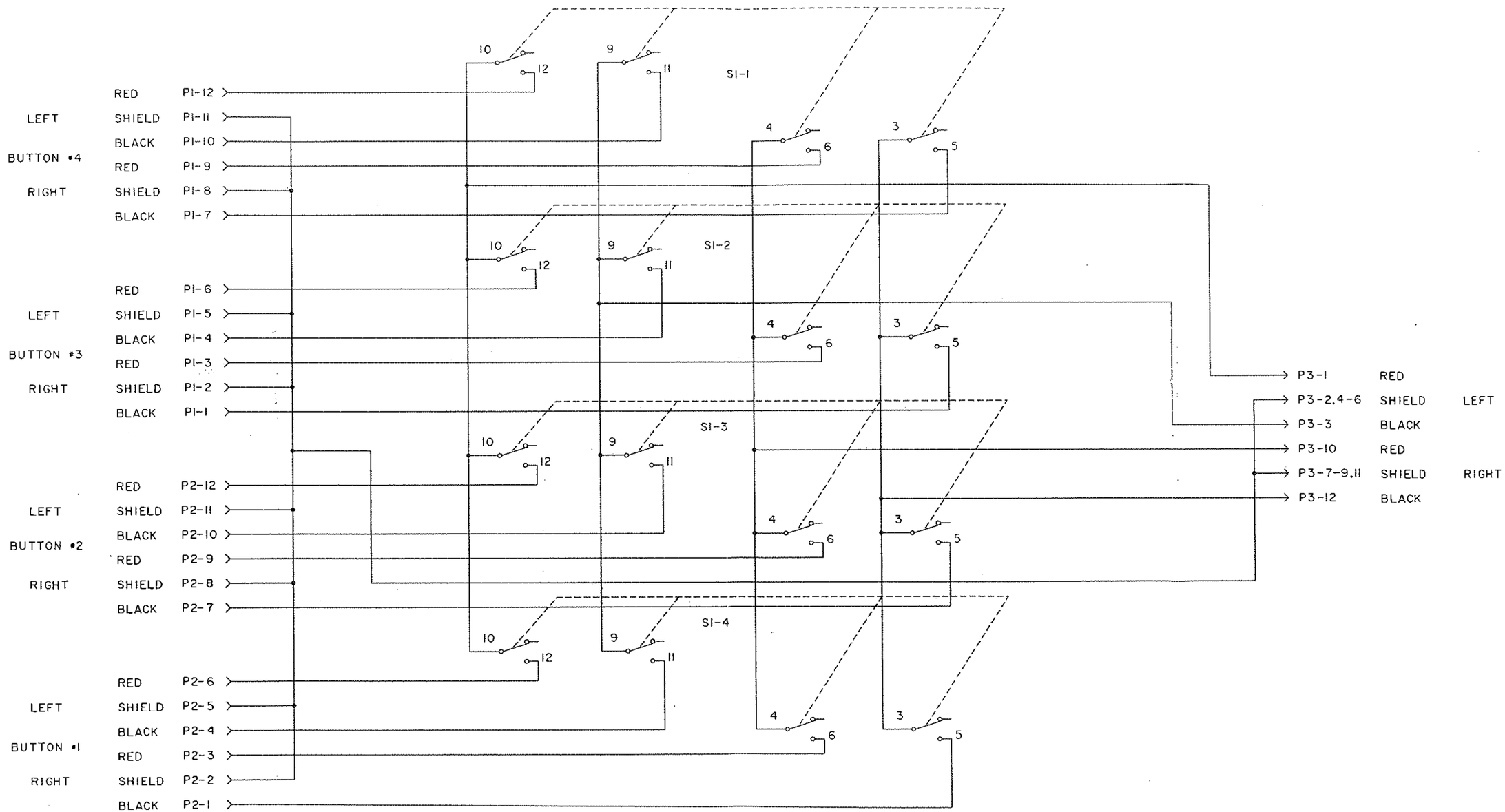

FIGURE 4-2 SCHEMATIC
P&G 4 X 1 PRE-SELECT BOARD
839 6377 092

1. BUTTONS ARE NUMBERED FROM TOP TO BOTTOM AS VIEWED FROM THE FRONT OF THE ATTENUATOR.

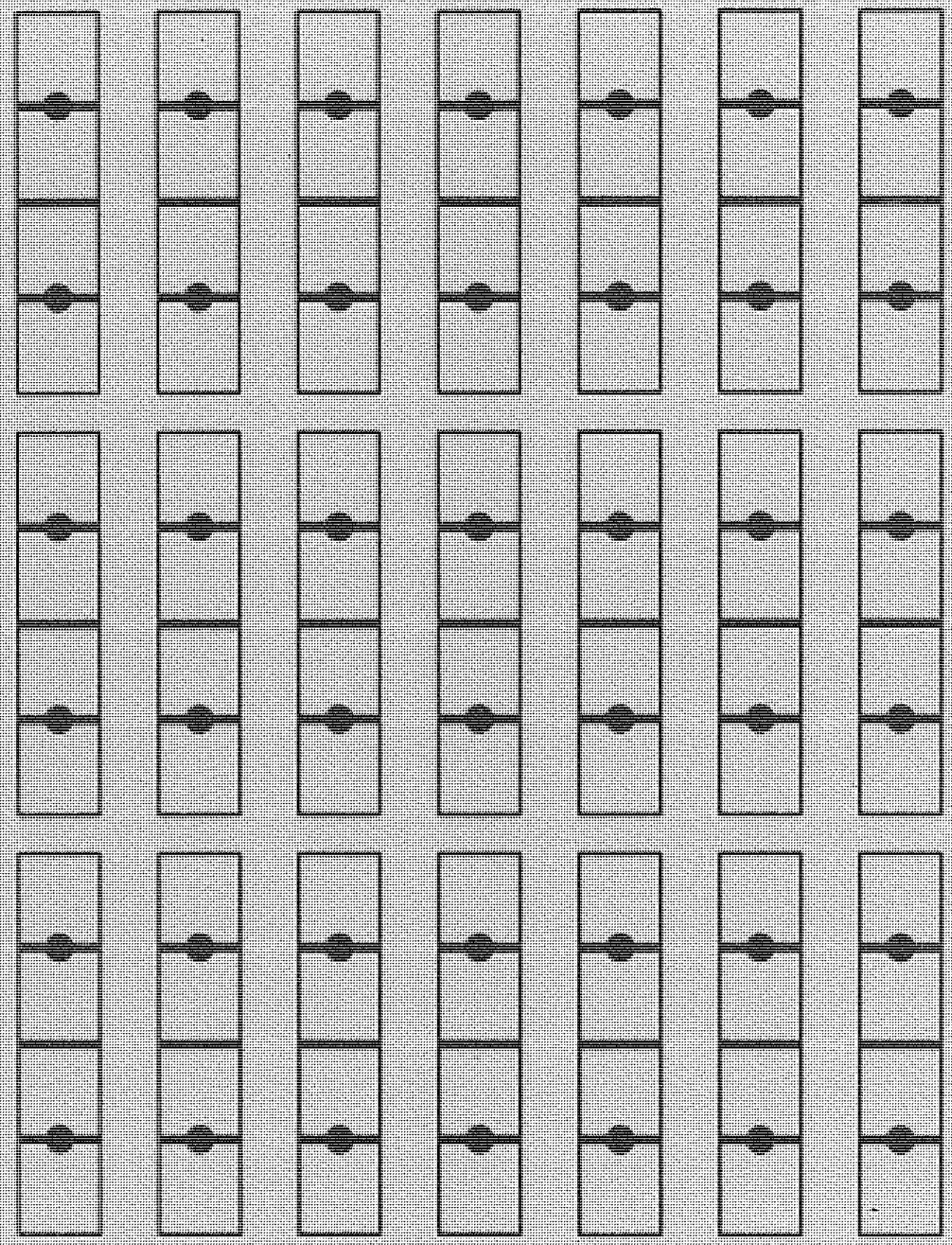

Figure 4-3. Inserts for Labeling Switch